P.O. Box 1026
Crossville, TN 38557
Ph. 931-484-7541
www.uplanddesigngroup.com

Addendum No. 5, June 24, 2025

Re: Johnson Hall Renovation – PKG 3
Johnson Hall Renovation & Foster Demolition
Tennessee Technological University
SBC Project No. 364/011-04-2022CM

From: Upland Design Group, Inc.
P.O. Box 1026 (38557)
362 Industrial Blvd.
Crossville, TN 38555
Telephone (931) 484 7541
Fax (931) 484 2351

KIM ALLEN CHAMBERLIN
REGISTERED ARCHITECT
AGRICULTURE
COMMERCE
No. 18154
STATE OF TENNESSEE
6/24/25

To: Prospective Bidders

This Addendum forms a part of the Contract Documents and modifies the original Bidding Documents dated March 28, 2025, as noted below. Acknowledge receipt of this Addendum in the space provided on the Bid Form. Failure to do so may subject Bidder to disqualification.

This Addendum consists of 4 pages and 57 pages of attachments (61 pages total).

Clarifications

1) PT, PT2 and PT3 are all 24”x48” in size. At locations that receive a porcelain tile base, see detail 15/GN1.2.
2) Carpet Tile CT1’s carpet tile size is 12”x48”. Carpet Tile CT2’s carpet tile size is 12”x36”. Carpet Tile CT3’s carpet tile size is 24”x24”.
3) LVT 1’s size is 18”x18”.
4) There is only one color of LVT. Remove references to LVT accent color.
5) Stor. 250’s floor should be LVT. Stor. 338’s floor should be LVT. Stor. 343’s floor should be sealed concrete.
6) On the C1.1 Site Plan sheet, there is a 6” fire line and a 2” domestic tap from the point of service in the center of A Street that is running north to Johnson Hall. The lines appear to stop short of the building, but they are entering into the existing basement at the ‘elevated concrete slab’, which is an areaway into the basement mechanical room. See P1.0 for the layout of lines in the basement for the continuation from C1.1.
7) Remove any references to accent color tile on the display case detailed on A8.01. All tile to wall tile PT3 on display case base. Top of display to be PT3.
8) Porcelain tile base is detailed on 15/GN1.2. The porcelain tile base is a cut tile that is 6” tall. There are stainless steel trim pieces at the top and bottom of cut tile similar to Schluter Quadec and Schluter Dilex-EHK.
9) The WT on the plan north wall of space 101 Plaza Lobby of the finish schedules is referring to the elevator shaft that has the wall tile on it. That is the PT3 material from Finish Legend,
10) On Stair B and Stair C, the treads are radial rubber tile and the landings are LVT.
11) The area that is disturbed is less than one acre, so an NOI is not required; therefore, an erosion plan was not developed. They only BMPs needed are inlet protection.

12) Stairs A, D and E have a porcelain tile finish with a Schluter Trep-E profile for the nosing edge and a Schluter-Dilex-BWA at locations where the tile abuts the steel stringer and riser. Stairs B, C and the stairs in Auditorium 141 utilize a Raised Round Tread (RNRD) similar to Johnsonite rubber treads by Tarkett. All landings on stairs B and C are LVT. The radial rubber tile is only on the treads of the stairs. The steel of risers of the stairs to be painted.
13) For the acoustic wall panels, the face material of the panels can be either the 100% polyester or the 100% polyolefin as long as the selected material meets the rest of the requirements detailed in the specifications. If 100% polyester is used, manufacturer's standard fabric (Guilford FR701-2100 or prior approved equal) is acceptable. If 100% polyolefin is used, Xorel Sahara Matte – 600 series or similar price point is acceptable.
14) All grass areas around Johnson Hall are to be sod as shown on the civil drawings. There will be no other plantings installed, only sod. For the irrigation system, see note 19 on sheet C1.1.
15) The old fireline and the associated PIV can be removed and capped at the valve in the street.
16) The walkoff carpet at Plaza Lobby 101 shall be Matter Surfaces Super Nop 52 Roll with two color logo. Digital file of logo to be provided during the shop drawing phase. The walk off carpet in Corridor 131 and Stair C Level 1 133 shall be Shaw Pace Tile, Patcraft Moving, or prior approved equal.
17) All asphalt pavement has 12" pavement schedule (8" gravel+2.5" base layer+1.5" finish layer).
18) Curb and gutter is only at the asphalt repair near the University Center. The rest of new curb on the project is extruded. Coordinate with Civil Drawings for location and extent of the different types of curbs.
19) Contractor to field verify top of existing building's footings. Coordinate with new addition's footings and their elevations and any associated tie-ins. Coordinate with Designer immediately if there are any discrepancies with the tie-ins.
20) All aluminum FG doors to have a mid rail per Door Frame legend on door schedule drawings.
21) Aluminum windows paint to meet or exceed 2605 finish.
22) If the balcony alternate is not taken, do not remove the portion of the existing walls for the installation of doors 232, 325, and 427. Instead of installing the doors, fill existing openings with window type W1.
23) In Tiered Classroom 223, the curved built-in countertops and casework has been switched to a segmented version per the revised, attached A1.51. Field verify angles and dimensions of revised casework with existing risers to remain.
24) The area of the removed Foster Hall to receive a minimum of 8-inches of topsoil, fescue grass seed, fertilizer and straw mulch per sheet C1.1.

Changes to Specifications:

25) Refer to section 09 68 00 Carpeting, section 2.1. Add note B to read: Walkoff carpet in the plaza lobby 101 is Super Nop 52 Roll with Two Color logo by Mater Surfaces. Digital logo file to be supplied by Owner during shop drawing phase. Color to be determined. Walkoff carpet tiles at the rest of build to be Shaw Pace, Patcraft Moving, or prior approved equal. Color to be determined.

Changes to Drawings:

26) Refer to Cover 1, update index of drawings to include new revision dates of pages modified by this addendum.
27) Refer to Cover 2, update index of drawings to include new revision dates of pages modified by this addendum.
28) Refer to sheet C0.1 Demo Plan. Add note "All storm sewer within the demo area shall be removed unless otherwise shown on the grading plan, sheet C2.1."
29) Refer to sheet C2.1 Grading Plan. Delete the new 42" storm line from JB3 to EX. Upstream per the revised C2.1 with revision mark 2. Leave the existing 42" RCP Pipe in place.

30) Refer to sheet LS2.3 Life Safety Plan – 3rd Floor. Add wall wash sprinkler heads at the 3rd Floor Balcony 304 on the lobby side of the glass.
31) Refer to drawing D1.1 Demolition Plan – First Floor – PKG 3. Remove existing concrete mechanical housekeeping pads in Existing Mec. / Elect. Room 132 and Mechanical Room 001. See attached revised D1.1 sheet with revision mark 8 dated 6-24-25.
32) Refer to drawing D1.5 Demolition Plan – Attic. Add hatches showing the extent of key notes "L" and "O".
33) Refer to sheets A1.21 and A2.1, change floor material PT's size to only read 24"x48". Change PT base size to read "6" – refer to detail 15/GN. Add PT2 Base's size to read "6" Refer to Detail 15/GN1.2"
34) Refer to sheets A1.21, A1.22, A1.23 and A1.24 Finish Legend. Remove LVT 2 – Luxury Vinyl Tile Accent material from the legend. Add WCT information under Floor subcategory per the attached revised sheets with revision mark 8 dated 6-24-25.
35) Refer to sheet A1.22 Finish Plan – 2nd Floor. Vending 239 only has LVT1. There is no accent color in that space.
36) Refer to sheet A1.23 Finish Plan – 3rd Floor. Change Stor 343 to sealed concrete.
37) Refer to sheet A1.51 Enlarged Classroom Plans, 2nd Floor Tiered Classrm. Change curved built-in furnishing countertops and casework to a segmented version per the revised, attached A1.51 sheet.
38) Refer to sheet A2.1 Finish Schedule 1st and 2nd Floors. Change the floor material of Closet 120 and Corridor 124 to LVT.
39) Refer to sheet A2.2 Finish Schedule 3rd and 4th Floors. Change Stor.343 floor material to SC.
40) Refer to sheet A2.3 Door Schedule – 1st and 2nd Floor. Frame Type XII is a hollow metal frame at doors 103A, 203, 303, and 403. Change Doors 103A and 203 to a double NLR, wood door B90 with glass type E and hardware set 5 and frame type HM with head detail 93 and jamb detail 60. Change door 103C to a single NLR, wood door B90 with hardware set 8.
41) Refer to sheet A2.4 Door Schedule – 3rd and 4th Floor. Change doors 303 and 403 to a double NLR, wood door B90 with glass type E and hardware set 5 and frame type HM with head detail 93 and jamb detail 60.
42) Refer to sheet A2.5 Window Types. Change the mullion configuration of window type W4 per the attached revised A2.5.
43) Refer to sheet A2.8 Door and Window Details. Change door frame material on details 41 and 60 to a hollow metal door frame.
44) Refer to sheet A2.9 Door and Window Details. Change door frame material on detail 93 to a hollow metal door frame.
45) Refer to sheet A5.10 Roof Plan. Add hatch and note "Provide new roof infill at location of removed dormer. Blend new shingles with surrounding existing shingles." per attached revised sheet.
46) Refer to sheet A6.05 Interior Elevations, details 4 and 5. Change doors 103A, 103C, 203 and 303 to NLR wood doors. Coordinate with door schedule.
47) Refer to sheet A8.01 Casework Detail, details 5 and 6. Remove references to accent tile. All wall tile is PT3.
48) Refer to sheet S0.00 Structural Cover Sheet & Index of Structural Drawings. Modify structural index of structural drawings per revised attached S0.00 sheet.
49) Refer to sheet S0.03 Typical Details & Schedules. Modify column footing schedule per revised, attached S0.03 sheet.
50) Refer to sheet S0.04 Typical Details & Schedules. Add detail 14 to revised, attached S0.04.
51) Refer to sheet S0.05 Typical Details & Schedules. Change annotation for light gage headers to read "By LG Engineer".
52) Refer to sheet S0.20. First Floor Slab Plan. Change name of detail 12 to read "Typical Slab on Grade Blockout Around Steel Columns."

53) Refer to sheet S1.10. Overall Foundation & First Floor Plan. Add note 15 to read “Contractor to verify top of footing elevation in the field prior to construction and coordinate new footing steps with existing conditions.”
54) Refer to sheet S1.1 Foundation & First Floor Plan – Part A. Added clarification note on vertical bracing.
55) Refer to sheet S1.12 Foundation & First Floor Plan – Part B. Replace sheet with revised, attached S1.12.
56) Add sheet S1.13 Foundation & First Floor Plan – Part C.
57) Add sheet S1.15 Enlarged Plan & Details – Fire Pump Room.
58) Refer to sheet S1.20 Overall Second Floor Plan Framing Plan. Change note 16 to read “Consider 10 kips for beam end reaction at service level unless noted otherwise in plan.”
59) Refer to sheet S1.21 Second Floor Framing Plan – Part A. Added clarification note on vertical bracing.
60) Refer to sheet S1.22 Second Floor and Low Roof Framing Plan – Part B. Added separate base bid and alternate balcony views for clarification.
61) Add sheet S1.23 Second Floor Framing Plan – Part C
62) Refer to sheet S1.31 Third Floor Framing Plan – Part A. Added clarification note on vertical bracing.
63) Refer to sheet S1.32 Third Floor Framing Plan – Part B. Added separate base bid and alternate balcony views for clarification.
64) Add sheet S1.33 Third Floor Framing Plan- Part C.
65) Refer to sheet S1.41 Fourth Floor and Low Roof Framing Plan – Part A. Added clarification note on vertical bracing.
66) Refer to sheet S1.42 Fourth Floor Framing Plan – Part B. Added separate base bid and alternate balcony views for clarification.
67) Add sheet S1.43 Fourth Floor Framing Plan – Part C.
68) Refer to sheet S1.51 Roof Framing Plan – Part A. Replace sheet with revised, attached S1.51
69) Refer to sheet S1.52 Roof Framing Plan – Part B. Replace sheet with revised, attached S1.52
70) Refer to sheet S2.10 Foundation & First Floor Sections. Replace sheet with revised, attached S2.10.
71) Refer to sheet S2.11 Foundation & First Floor Sections. Replace sheet with revised, attached S2.11.
72) Refer to sheet S2.12 Foundation & First Floor Sections. Add details 11 and 12.
73) Refer to sheet S2.20 Floor Framing Sections. Replace sheet with revised, attached S2.20.
74) Refer to sheet S2.22 Floor Framing Sections. Added details 1, 5, 6, 9, 10, 13, 14, 15, and 16 per attached revised S2.22.
75) Add Sheet S2.23 Floor Framing Sections – Alternates.
76) Refer to sheet S2.30 Low Roof Framing Sections. Replace sheet with revised, attached S2.30
77) Refer to sheet S2.40 Roof Framing Sections. Replace sheet with revised, attached S2.40.
78) Refer to sheet S2.41 Roof Framing Sections. Replace sheet with revised, attached S2.41.
79) Refer to sheet FP1.3 Third Floor Fire Protection Plan. Add wall wash sprinkler heads at the 3rd Floor Balcony 304 on the lobby side of the glass.
80) Refer to sheet E0.1 Electrical Notes and Legends. Add ATS-FP to Automatic Transfer Switch Schedule per revised, attached E0.1.
81) Refer to sheet E1.0 Electrical Site Plan. Add note and location of unused existing underground communication conduit per revised, attached E1.0.
82) Refer to sheet E4.1 Electrical Riser Diagram. Add ATS-FP to Electrical Riser Diagram per revised, attached E4.1.
83) Refer to T1.0 Technology Site Plan. Add note and location of unused existing underground communication conduit per revised, attached T1.0.

END OF ADDENDUM

JOHNSON HALL RENOVATION - PKG 3 VOL 1

JOHNSON HALL RENOVATION & FOSTER DEMOLITION

SBC N^{O} 364/011-04-2022CM

TENNESSEE TECHNOLOGICAL UNIVERSITY COOKEVILLE, PUTNAM COUNTY, TN

JOHNSON HALL
1105 N. PEACHTREE AVE.
COOKEVILLE, TN 38501

REGULATORY REQUIREMENTS

LISTED BELOW ARE THE REGULATORY REQUIREMENTS THAT APPLY TO THIS PROJECT, REFER TO SECTION 01 41 14 REGULATORY REQUIREMENTS. THIS LIST IS PROVIDED AS A CONVENIENCE TO THE CONTRACTOR AND IS NOT TO BE CONSIDERED ALL INCLUSIVE OF CODES AND REGULATIONS THAT MAY APPLY. THE CONTRACTOR SHALL COMPLY WITH ALL PERTINENT CODES, STANDARDS, REGULATIONS AND LAWS.

(A) INTERNATIONAL BUILDING CODE (IBC), 2012 EDITION, PUBLISHED BY THE INTERNATIONAL CODE COUNCIL (ICC), EXCEPT FOR:
  1. CHAPTER 11 ACCESSIBILITY; AND,
  2. CHAPTER 34, SECTION 3411 ACCESSIBILITY FOR EXISTING BUILDINGS;
(B) THE INTERNATIONAL FUEL GAS CODE (IFGC), 2012 EDITION, PUBLISHED BY THE INTERNATIONAL CODE COUNCIL (ICC);
(C) THE INTERNATIONAL MECHANICAL CODE (IMC), 2012 EDITION, PUBLISHED BY THE INTERNATIONAL CODE COUNCIL (ICC);
(D) THE INTERNATIONAL PLUMBING CODE (IPC), 2012 EDITION, PUBLISHED BY THE INTERNATIONAL CODE COUNCIL (ICC);
(E) THE INTERNATIONAL PROPERTY MAINTENANCE CODE (IPMC), 2012 EDITION, PUBLISHED BY THE INTERNATIONAL CODE COUNCIL (ICC);
(F) THE INTERNATIONAL FIRE CODE (IFC), 2012 EDITION, PUBLISHED BY THE INTERNATIONAL CODE COUNCIL (ICC);
(G) THE INTERNATIONAL ENERGY CONSERVATION CODE (IECC), 2012 EDITION, PUBLISHED BY THE INTERNATIONAL CODE COUNCIL (ICC), EXCEPT THAT THE PROVISIONS OF THE INTERNATIONAL ENERGY CONSERVATION CODE, 2006 EDITION, SHALL APPLY TO THE FOLLOWING OCCUPANCY CLASSIFICATIONS AS DEFINED BY THE INTERNATIONAL BUILDING CODE (IBC), 2012 EDITION:
  1. MODERATE-HAZARD FACTORY INDUSTRIAL, GROUP F-1;
  2. LOW-HAZARD FACTORY INDUSTRIAL, GROUP F-2;
  3. MODERATE-HAZARD STORAGE, GROUP S-1; AND,
  4. LOW-HAZARD STORAGE, GROUP S-2;
(H) THE INTERNATIONAL EXISTING BUILDING CODE (IEBC), 2012 EDITION, PUBLISHED BY THE INTERNATIONAL CODE COUNCIL (ICC);
(I) FOR STATE BUILDINGS, EDUCATIONAL OCCUPANCIES AND ANY OTHER OCCUPANCY REQUIRING AN INSPECTION BY THE STATE FIRE MARSHAL FOR INITIAL LICENSURE, NFPA 101 LIFE SAFETY CODE, 2012 EDITION, PUBLISHED BY THE NATIONAL FIRE PROTECTION ASSOCIATION (NFPA);
(J) NO PROVISION OF THE PRECEDING CITED PUBLICATIONS SHALL BE ADOPTED THAT CONFLICTS WITH:
  1. THE INSTALLATION AND SERVICE STANDARDS OF PORTABLE FIRE EXTINGUISHERS AND FIXED FIRE EXTINGUISHER SYSTEMS IN TENN. COMP. R. & REGS. 0780-02-14-.02;
  2. THE STANDARDS FOR ENGAGING IN THE LIQUEFIED PETROLEUM GAS BUSINESS IN TENN. COMP. R. & REGS. 0780-02-17-.02.
(K) NATIONAL ELECTRIC CODE, NFPA 70, 2017 EDITION, PUBLISHED BY THE NATIONAL FIRE PROTECTION ASSOCIATION.
(L) TENNESSEE PUBLIC BUILDING ACCESSIBILITY ACT 2010 ADA STANDARDS FOR ACCESSIBLE DESIGN
(M) NFPA 13

CODE DATA

OCCUPANCY TYPE - B - BUSINESS (IBC 2012 SECTION 304.1)
A-3 - ASSEMBLY GROUP (IBC 2012 SECTION 303.4)

CONSTRUCTION TYPE - IIB SPRINKLERED (IBC TABLES 503/601)
RISK CATEGORY - III - BUILDINGS AND OTHER STRUCTURES CONTAINING ADULT EDUCATION FACILITIES, SUCH AS COLLEGES AND UNIVERSITIES, WITH AN OCCUPANT LOAD GREATER THAN 500.

ALLOWABLE BUILDING AREA (IBC 2012 TABLE 503)
BASE ALLOWABLE AREA: IIB - BUSINESS = 23,000 SQ. FT.
BASE ALLOWABLE AREA: IIB - ASSEMBLY A-3 = 9,500 SQ. FT.

MAX ALLOWABLE AREAS:
BUSINESS = 86,250 SQ. FT. (SEE FLOOR AREA PER OCCUPANCY ON LIFE SAFETY SHEETS FOR CALCULATIONS)
ASSEMBLY A-3 (LECTURE HALLS) = 35,625 SQ. FT. (SEE FLOOR AREA PER OCCUPANCY ON LIFE SAFETY SHEETS FOR CALCULATIONS)

ACTUAL AREAS:
1ST FLOOR: EXISTING 18,944 SF + NEW 2,450 SF + COVERED 1,343 SF = 22,737 SF
2ND FLOOR: EXISTING 17,080 SF + NEW 2,548 SF + COVERED 162 SF = 19,790 SF
3RD FLOOR: EXISTING 17,080 SF + NEW 2,296 SF + COVERED 162 SF = 19,538 SF
4TH FLOOR: EXISTING 14,874 SF + NEW 2,296 SF + COVERED 162 SF = 17,322 SF

TOTAL: EXISTING 67,978 SF + NEW 9,590 SF + COVERED 1,829 SF = 79,387 SF

BUSINESS OCCUPANCY TOTAL: 69,912 SF
A-3 ASSEMBLY OCCUPANCY TOTAL: 9,475 SF

CODE DATA CONTINUED

SEISMIC DATA
SITE CLASS = C
SEISMIC DESIGN CATEGORY = B
RISK CATEGORY III
SEE STRUCTURAL SHEETS FOR MORE INFORMATION

HEIGHT CALCULATIONS
MAX ALLOWABLE HEIGHT: 55' (75' INCLUDING INCREASE ALLOWED BY IBC 2012 504.2)
ACTUAL HEIGHT OF BUILDING: 59'
MAX ALLOWABLE STORIES: 3 (4 INCLUDING INCREASED ALLOWED BY IBC 2012 504.2)
ACTUAL NUMBER OF STORIES: 4

WIND EXPOSURE CATEGORY - B

WIND RISK CATEGORY - II

IECC CLIMATE ZONE - 4A IECC 2012 FIGURE C301.1

REVISIONS PER CHANGE ORDERS AND SUPPLEMENTAL INSTRUCTIONS

TYPE (CO / SI)	DATE	DESCRIPTION OF WORK
ADDENDUM 1	5-16-25	FIRE MARSHAL COMMENTS AND OTHER ITEMS
ADDENDUM 2	5-22-25	FIRE MARSHAL COMMENTS
ADDENDUM 3	6-11-25	FIRE MARSHAL COMMENTS AND OTHER ITEMS
ADDENDUM 4	6-24-25	MISC ADDENDUM ITEMS

INDEX TO DRAWINGS

Sheet Number	Sheet Name	Sheet Issue Date	Current Revision	Current Revision Date
GENERAL SHEETS				
COVER 1	COVER SHEET PACKAGE 3 VOL 1	03-28-25	8	6-24-25
CIVIL DRAWINGS				
C0.1	DEMO PLAN	03-28-25	8	6-24-25
C1.1	SITE PLAN	03-28-25		
C2.1	GRADING PLAN	03-28-25	8	6-24-25
C3.1	GRADING PLAN	03-28-25		
DEMOLITION DRAWINGS				
D1.0	OVERALL DEMOLITION SITE	03-28-25		
D1.1	DEMOLITION PLAN - FIRST FLOOR - PKG 3	03-28-25	8	6-24-25
D1.2	DEMOLITION PLAN - SECOND FLOOR - PKG 3	03-28-25	4	5-16-25
D1.3	DEMOLITION PLAN - THIRD FLOOR - PKG 3	03-28-25	7	6-11-25
D1.4	DEMOLITION PLAN - FOURTH FLOOR - PKG 3	03-28-25	4	5-16-25
D1.5	DEMOLITION PLAN - ATTIC	03-28-25	8	6-24-25
D2.1	EXISTING ELEVATIONS - DEMOLITION - PKG 3	03-28-25		
D2.2	EXISTING ELEVATIONS - DEMOLITION - PKG 3	03-28-25	7	6-11-25
D3.1	BUILDING SECTIONS - DEMOLITION	03-28-25		
ARCHITECTURAL DRAWINGS				
GN1.1	GENERAL NOTES	03-28-25		
GN1.2	GENERAL NOTES AND DETAILS	03-28-25		
GN1.3	WALL TYPES	03-28-25		
GN1.4	WALL TYPES	03-28-25		
GN1.5	WALL TYPES	03-28-25		
GN2.1	UL PAGES	03-28-25	6	5-22-25
GN2.2	UL PAGES	03-28-25	7	6-11-25
LS1.1	LIFE SAFETY NOTES AND SCHEDULES	03-28-25	4	5-16-25
LS2.1	LIFE SAFETY PLAN - 1ST FLOOR	03-28-25	7	6-11-25
LS2.2	LIFE SAFETY PLAN - 2ND FLOOR	03-28-25	7	6-11-25
LS2.3	LIFE SAFETY PLAN - 3RD FLOOR	03-28-25	8	6-24-25
LS2.4	LIFE SAFETY PLAN - 4TH FLOOR	03-28-25	4	5-16-25
A1.0	OVERALL ARCHITECTURAL SITE PLAN	03-28-25		
A1.1D	FIRST FLOOR - DIMENSIONS	03-28-25	7	6-11-25
A1.1N	FIRST FLOOR - NOTATIONS	03-28-25	7	6-11-25
A1.2D	SECOND FLOOR - DIMENSIONS	03-28-25	7	6-11-25
A1.2N	SECOND FLOOR - NOTATIONS	03-28-25	7	6-11-25
A1.3D	THIRD FLOOR - DIMENSIONS	03-28-25	7	6-11-25
A1.3N	THIRD FLOOR - NOTATIONS	03-28-25	7	6-11-25
A1.4D	FOURTH FLOOR - DIMENSIONS	03-28-25	4	5-16-25
A1.4N	FOURTH FLOOR - NOTATIONS	03-28-25	4	5-16-25
A1.5	ATTIC PLAN	03-28-25	4	5-16-25
A1.21	FINISH PLAN - 1ST FLOOR	03-28-25	8	6-24-25
A1.22	FINISH PLAN - 2ND FLOOR	03-28-25	8	6-24-25
A1.23	FINISH PLAN - 3RD FLOOR	03-28-25	8	6-24-25
A1.24	FINISH PLAN - 4TH FLOOR	03-28-25	8	6-24-25
A1.31	ENLARGED PLANS	03-28-25	7	6-11-25
A1.32	ENLARGED PLANS	03-28-25	7	6-11-25
A1.41	ENLARGED RESTROOM PLANS	03-28-25		
A1.51	ENLARGED CLASSROOM PLANS	03-28-25	8	6-24-25
A1.61	STAIR PLANS AND SECTIONS - STAIR A	03-28-25	7	6-11-25
A1.62	STAIR PLANS AND SECTIONS - STAIR B	03-28-25	4	5-16-25
A1.63	STAIR PLANS AND SECTIONS - STAIR C	03-28-25		
A1.71	ELEVATOR PLANS & SECTIONS	03-28-25		
A2.1	FINISH SCHEDULE - 1ST AND 2ND FLOORS	03-28-25	8	6-24-25
A2.2	FINISH SCHEDULE - 3RD AND 4TH FLOORS	03-28-25	8	6-24-25
A2.3	DOOR SCHEDULE - 1ST AND 2ND FLOOR	03-28-25	8	6-24-25
A2.4	DOOR SCHEDULE - 3RD AND 4TH FLOOR	03-28-25	8	6-24-25
A2.5	WINDOW TYPES	03-28-25	8	6-24-25
A2.6	EXTERIOR DETAILS	03-28-25	4	5-16-25
A2.7	DOOR AND WINDOW DETAILS	03-28-25		
A2.8	DOOR AND WINDOW DETAILS	03-28-25	8	6-24-25
A2.9	DOOR AND WINDOW DETAILS	03-28-25	8	6-24-25
A2.10	FIRE RATED WINDOW DETAILS	03-28-25	4	5-16-25
A3.01	EXTERIOR ELEVATIONS	03-28-25	7	6-11-25
A3.02	EXTERIOR ELEVATIONS	03-28-25	7	6-11-25
A3.03	PRECAST PANELS ELEVATIONS	03-28-25		
A3.05	ENLARGED ELEVATIONS	03-28-25		
A3.06	COLUMN AND QUION ELEVATIONS	03-28-25		
A4.01	BUILDING SECTIONS	03-28-25	4	5-16-25
A4.02	BUILDING SECTIONS	03-28-25		
A4.03	BUILDING SECTIONS	03-28-25		
A4.04	BUILDING SECTIONS	03-28-25		
A4.05	BUILDING SECTIONS	03-28-25		
A4.06	BUILDING SECTIONS	03-28-25		
A4.11	WALL SECTIONS	03-28-25	4	5-16-25
A4.12	WALL SECTIONS	03-28-25		
A4.13	WALL SECTIONS	03-28-25	4	5-16-25
A4.14	WALL SECTIONS	03-28-25	4	5-16-25
A4.15	WALL SECTIONS	03-28-25	4	5-16-25
A4.16	WALL SECTIONS	03-28-25	4	5-16-25
A4.17	WALL SECTIONS	03-28-25		
A4.18	WALL SECTIONS	03-28-25		
A4.19	WALL SECTIONS	03-28-25		
A4.20	WALL SECTIONS	03-28-25		
A4.21	WALL SECTIONS	03-28-25		
A4.22	WALL SECTIONS	03-28-25	4	5-16-25
A4.23	WALL SECTIONS	03-28-25	4	5-16-25
A5.10	ROOF PLAN	03-28-25	8	6-24-25
A5.11	ROOF DETAILS	03-28-25		
A5.12	ROOF DETAILS	03-28-25		
A5.13	ROOF DETAILS	03-28-25		
A5.14	ROOF DETAILS	03-28-25		
A5.15	ROOF DETAILS	03-28-25		
A5.16	ROOF DETAILS	03-28-25		
A6.01	INTERIOR ELEVATIONS	03-28-25		
A6.02	INTERIOR ELEVATIONS	03-28-25	4	5-16-25
A6.03	INTERIOR ELEVATIONS	03-28-25	4	5-16-25
A6.04	ENLARGED CLASSROOM PLAN & ELEV	03-28-25		
A6.05	INTERIOR ELEVATIONS	03-28-25	8	6-24-25
A6.06	INTERIOR ELEVATIONS	03-28-25	7	6-11-25
A6.07	INTERIOR ELEVATIONS	03-28-25		
A6.08	INTERIOR ELEVATIONS	03-28-25		
A6.09	INTERIOR ELEVATIONS	03-28-25	4	5-16-25
A7.10	REFLECTED CEILING PLANS - FIRST FLOOR	03-28-25	7	6-11-25
A7.20	REFLECTED CEILING PLAN - SECOND FLOOR	03-28-25	7	6-11-25
A7.30	REFLECTED CEILING PLAN - THIRD FLOOR	03-28-25	7	6-11-25
A7.40	REFLECTED CEILING PLAN - FOURTH FLOOR	03-28-25	4	5-16-25
A8.01	CASEWORK DETAILS	03-28-25	8	6-24-25
A8.02	ENLARGED PLAN DETAILS	03-28-25		
A8.03	ENLARGED PLAN DETAILS	03-28-25		
A8.04	ENLARGED PLAN DETAILS	03-28-25	4	5-16-25
A8.05	ENLARGED PLAN DETAILS	03-28-25		
A8.06	ENLARGED PLAN DETAILS	03-28-25		
A9.01	ALTERNATES	03-28-25		
A9.02	ALTERNATES	03-28-25		
A9.03	ALTERNATES	03-28-25		
STRUCTURAL DRAWINGS				
S0.00	STRUCTURAL COVER SHEET & INDEX OF STRUCTURAL DRAWINGS	03-28-25	1	6-24-25
S0.01	STRUCTURAL GENERAL NOTES	03-28-25		
S0.02	SPECIAL INSPECTION NOTES	03-28-25		
S0.03	TYPICAL DETAILS & SCHEDULES	03-28-25	1	6-24-25
S0.04	TYPICAL DETAILS & SCHEDULES	03-28-25	1	6-24-25
S0.05	TYPICAL DETAILS & SHCEDULES	03-28-25	1	6-24-25
S0.06	TYPICAL DETAILS & SCHEDULES	03-28-25		
S0.07	TYPICAL DETAILS & SCHEDULES	03-28-25		
S0.08	TYPICAL DETAILS & SCHEDULES	03-28-25		
S0.20	FIRST FLOOR SLAB PLAN	03-28-25	1	6-24-25
S0.21	LOAD MAP - FOURTH FLOOR LOAD MAP	03-28-25		
S0.22	LOAD MAP - ROOF SNOW LOAD DIAGRAM	03-28-25		
S0.23	LOAD MAP - ROOF UPLIFT DIAGRAM	03-28-25		
S0100	STRUCTURAL DEMOLITION PLAN	03-28-25		
S1.10	OVERALL FOUNDATION & FIRST FLOOR PLAN	03-28-25	1	6-24-25
S1.11	FOUNDATION & FIRST FLOOR PLAN - PART A	03-28-25	1	6-24-25
S1.12	FOUNDATION & FIRST FLOOR PLAN - PART B	03-28-25	1	6-24-25
S1.13	FOUNDATION & FIRST FLOOR PLAN - PART C	06-24-25	1	6-24-25
S1.15	ENLARGED PLAN & DETAILS - FIRE PUMP ROOM	06-24-25	1	6-24-25
S1.20	OVERALL SECOND FLOOR FRAMING PLAN	03-28-25	1	6-24-25
S1.21	SECOND FLOOR FRAMING PLAN - PART A	03-28-25	1	6-24-25
S1.22	SECOND FLOOR AND LOW ROOF FRAMING PLAN - PART B	03-28-25	1	6-24-25
S1.23	SECOND FLOOR FRAMING PLAN - PART C	06-24-25	1	6-24-25
S1.30	OVERALL THIRD FLOOR FRAMING PLAN	03-28-25		
S1.31	THIRD FLOOR FRAMING PLAN - PART A	03-28-25	1	6-24-25
S1.32	THIRD FLOOR FRAMING PLAN - PART B	03-28-25	1	6-24-25
S1.33	THIRD FLOOR FRAMING PLAN - PART C	06-24-25	1	6-24-25
S1.40	OVERALL FOURTH FLOOR FRAMING PLAN	03-28-25		
S1.41	FOURTH FLOOR AND LOW ROOF FRAMING PLAN - PART A	03-28-25	1	6-24-25
S1.42	FOURTH FLOOR FRAMING PLAN - PART B	03-28-25	1	6-24-25
S1.43	FOURTH FLOOR FRAMING PLAN - PART C	06-24-25	1	6-24-25
S1.45	MEZZANINE LEVEL - PARTIAL PLAN AND DETAILS	03-28-25		
S1.50	OVERALL ROOF FRAMING PLAN	03-28-25		
S1.51	ROOF FRAMING PLAN - PART A	03-28-25	1	6-24-25
S1.52	ROOF FRAMING PLAN - PART B	03-28-25	1	6-24-25
S2.10	FOUNDATION & FIRST FLOOR SECTIONS	03-28-25	1	6-24-25
S2.11	FOUNDATION & FIRST FLOOR SECTIONS	03-28-25	1	6-24-25
S2.12	FOUNDATION & FIRST FLOOR SECTIONS	03-28-25	1	6-24-25
S2.20	FLOOR FRAMING SECTIONS	03-28-25	1	6-24-25
S2.21	FLOOR FRAMING SECTIONS	03-28-25		
S2.22	FLOOR FRAMING SECTIONS	03-28-25	1	6-24-25
S2.23	FLOOR FRAMING SECTIONS - ALTERNATES	06-24-25	1	6-24-25
S2.30	LOW ROOF FRAMING SECTIONS	03-28-25	1	6-24-25
S2.40	ROOF FRAMING SECTIONS	03-28-25	1	6-24-25
S2.41	ROOF FRAMING SECTIONS	03-28-25	1	6-24-25
S3.10	FRAME ELEVATIONS	03-28-25		

UPDATED CURRENT REVISION MARKS AND DATES ON INDEX TO DRAWINGS

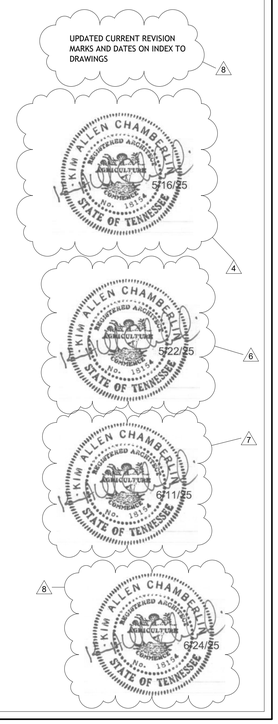

FIRE RESISTANCE

FIRE RESISTANCE RATING REQUIREMENTS

IBC 2012 - TABLE 601

BUILDING ELEMENTS	TYPE II-B
PRIMARY STRUCTURAL FRAME	0
BEARING WALLS - EXTERIOR ([f], [g])	0
BEARING WALLS - INTERIOR	0
NON-BEARING WALLS & PARTITIONS (EXTERIOR)	0
NON-BEARING WALLS & PARTITIONS (INTERIOR)	0
FLOOR CONSTRUCTION & ASSOCIATED SECONDARY MEMBERS	0
ROOF CONSTRUCTION & ASSOCIATED SECONDARY MEMBERS	0

f. NOT LESS THAN THE FIRE-RESISTANCE RATING BASED ON FIRE SEPARATION DISTANCE (SEE TABLE 602).

g. NOT LESS THAN THE FIRE-RESISTANCE RATING AS REFERENCED IN SECTION 704.10.

IBC TABLE 602 - FIRE SEPARATION DISTANCE IS GREATER THAN 30'.

INTERIOR FINISHES

803.1.1 INTERIOR WALL AND CEILING FINISH MATERIALS
INTERIOR WALL AND CEILING FINISH MATERIALS SHALL BE CLASSIFIED IN ACCORDANCE WITH ASTM E 84 OR UL 723. SUCH INTERIOR FINISH MATERIALS SHALL BE GROUPED IN THE FOLLOWING CLASSES IN ACCORDANCE WITH THEIR FLASH SPREAD AND SMOKE-DEVELOPED INDEXES:

CLASS A: = FLAME SPREAD INDEX 0-25; SMOKE-DEVELOPED INDEX 0-450.
CLASS B: = FLAME SPREAD INDEX 26-75; SMOKE-DEVELOPED INDEX 0-450.
CLASS C: = FLAME SPREAD INDEX 76-200; SMOKE-DEVELOPED INDEX 0-450.

REQUIRED BY OCCUPANCY

GROUP A-3 (SPRINKLERED):	CLASS
INTERIOR EXIT PASSAGEWAYS:	B
CORRIDORS:	B
ROOMS AND ENCLOSED SPACES	C

GROUP B (SPRINKLERED):	CLASS
INTERIOR EXIT PASSAGEWAYS:	B
CORRIDORS:	C
ROOMS AND ENCLOSED SPACES:	C

FIRE-RATED SEPARATION NOTES:

REQUIRED SEPARATIONS BETWEEN OCCUPANCIES
REQUIRED SEPARATIONS BETWEEN OCCUPANCIES PER IBC 2012 TABLE 508.4. BETWEEN B AND A-3 (SPRINKLED) - 1 HOUR

CORRIDOR SEPARATION (WITH SPRINKLER FOR A AND B OCCUPANCIES): NO RATING (IBC TABLE 1018.1).

WINDOWS IN RATED APPLICATIONS
AUTOMATIC SPECIAL-PURPOSE SPRINKLER SYSTEM USED IN CONJUNCTION WITH FIXED GLAZED WALL ASSEMBLY TO PROVIDE AN ALTERNATIVE TO A TWO-HOUR FIRE-RESISTANCE-RATED NONLOAD-BEARING INTERIOR FIRE BARRIER ASSEMBLY PRESCRIBED IN IBC SECTION 707 PER ICC-ES EVALUATION REPORT ESR-2397. APPLICABLE FOR FIRE BARRIERS AND EXTERIOR WALL FOR UP TO 2-HOUR FIRE-RESISTANCE RATING (ICC-ES ESR-2397 3.1, 5.3).

ATRIUM SPRINKLER PROTECTION
ATRIUM SPACES SHALL BE SEPARATED FROM ADJACENT SPACES BY A 1-HOUR FIRE BARRIER CONSTRUCTED IN ACCORDANCE WITH SECTION 909. (IBC 2012 - 404.6)

A FIRE BARRIER IS NOT REQUIRED WHERE A GLASS WALL FORMING A SMOKE PARTITION IS PROVIDED. SPRINKLERS MUST BE PROVIDED ON THE ROOM SIDE ONLY IF THERE IS NO WALKWAY ON THE ATRIUM SIDE OF THE GLASS, GLASS WALLS MUST BE IN A GASKETED FRAME, AND GLASS DOORS SHALL BE SELF-CLOSING. (IBC 404.6 EXCEPTION 1, 1.1-1.3)

SMOKE CONTROL IS NOT REQUIRED FOR ATRIUMS THAT CONNECT ONLY TWO STORIES. (IBC 2012 - 404.5 EXCEPTION). THE THIRD FLOOR OF THE BUILDING IS SEALED OFF FROM THE ATRIUM. THE ATRIUM IS ONLY CONNECTING THE FIRST AND SECOND STORIES.

OPENINGS IN EXTERIOR WALLS
IBC 2012 - 705.8.2 EXCEPTION: OPENING PROTECTIVES ARE NOT REQUIRED WHERE THE BUILDING IS EQUIPPED THROUGHOUT WITH AN AUTOMATIC SPRINKLER SYSTEM IN ACCORDANCE WITH SECTION 903.3.1.1 AND THE EXTERIOR OPENINGS ARE PROTECTED BY A WATER CURTAIN USING AUTOMATIC SPRINKLES APPROVED FOR THAT USE.

PROJECT SUMMARY STATEMENT

EXISTING BUILDING RENOVATION OF AN EDUCATIONAL FACILITY WITH A TYPE II-B CONSTRUCTION. RENOVATION WILL UPDATE OUTDATED MECHANICAL AND ELECTRICAL AND INTERIOR ARCHITECTURAL ELEMENTS. NEW BUILDING ADDITIONS WILL BE ADDED TO INCREASE CIRCULATION AND EGRESS AND FREEUP PROGRAM SPACE IN THE BUILDING CORE. PROJECT SCOPE WILL ALSO INCLUDE MINOR LANDSCAPING AND GRADING TO ENHANCE BUILDING FRONTAGE.

RESPONDING FIRE DEPARTMENT

COOKEVILLE FIRE DEPARTMENT
P.O. BOX 998 - 45 EAST BROAD STREET
COOKEVILLE, TN 38503-0998
PHONE: 931-520-5236

LOCAL BUILDING INSPECTOR

COOKEVILLE CITY INSPECTOR - JEREMY GLASCOCK
45 EAST BROAD STREET
COOKEVILLE, TN 38501
PHONE: 931-520-5268

DESIGN TEAM

CIVIL ENGINEER	ASSOCIATED ARCHITECT	STRUCTURAL ENGINEER	MECHANICAL ENGINEER	PLUMBING ENGINEER	ELECTRICAL ENGINEER
CIVIL ENGINEERING & SURVEYING	UPLAND DESIGN GROUP, INC.	LOGAN PATRI ENGINEERING	MAFFETT LOFTIS ENGINEERING	MAFFETT LOFTIS ENGINEERING	MAFFETT LOFTIS ENGINEERING
214 E. STEVENS STREET COOKEVILLE, TN 38501 PHONE: 931-528-5266	P.O. BOX 1026 CROSSVILLE, TN 38555 PHONE: 931-484-7541 FAX: 931-484-2351	630 SOUTHGATE AVE, SUITE C NASHVILLE, TN 37203 PHONE: 615-726-2902	1 SOUTH JEFFERSON AVE, SUITE 101 COOKEVILLE, TN 38501 PHONE: 931-526-5143 FAX: 931-526-5153	1 SOUTH JEFFERSON AVE, SUITE 101 COOKEVILLE, TN 38501 PHONE: 931-526-5143 FAX: 931-526-5153	1 SOUTH JEFFERSON AVE, SUITE 101 COOKEVILLE, TN 38501 PHONE: 931-526-5143 FAX: 931-526-5153
WWW.CES-TN.COM	WWW.UPLANDDESIGNGROUP.COM	WWW.LOGANPATRIENGINEERING.COM	WWW.MAFFETT-LOFTIS.COM	WWW.MAFFETT-LOFTIS.COM	WWW.MAFFETT-LOFTIS.COM
DAVID SCOTT NICHOLS REGISTERED ENGINEER CIVIL NO. 105338 STATE OF TENNESSEE 3-28-25	KIM ALLEN CHAMBERLIN REGISTERED ARCHITECT AGRICULTURE STATE OF TENNESSEE 3/28/25	NARASIMHA RAO PATRI REGISTERED ENGINEER NO. 105444 STATE OF TENNESSEE 03/28/25	JUSTIN BLAKE NEWELL REGISTERED ENGINEER NUMBER STATE OF TENNESSEE 03/28/2025	JUSTIN BLAKE NEWELL REGISTERED ENGINEER NUMBER STATE OF TENNESSEE 03/28/2025	GARY DALE LOFTIS REGISTERED ENGINEER ELECTRICAL NUMBER STATE OF TENNESSEE 03/28/2025

COMMUNITY TECTONICS ARCHITECTS
7610 Gleason Road, Knoxville, TN 37919
Ph. (865) 637-0890 www.communitytectonics.com

Upland Design Group
P.O. Box 1026, Crossville, TN 38557
Ph. (931) 484-7541 www.uplanddesigngroup.com

W&O Construction
150 Construction Drive, Livingston, TN 38570
Ph. (931) 403-1000 www.wocc.com

PROJECT
JOHNSON HALL RENOVATION - PKG 3
JOHNSON HALL RENOVATION & FOSTER DEMOLITION
SBC N° 364/011-04-2022CM
OWNER: TENNESSEE TECH. UNIVERSITY
LOCATION: COOKEVILLE, TN

SEAL

NO.	DESCRIPTION	DATE
4	Addendum 1 - PKG 3	5-16-25
6	Addendum 2 - PKG 3	5-22-25
7	Addendum 3 - PKG 3	6-11-25
8	Addendum 5 - PKG 3	6-24-25

JOB NO. 22025

ISSUE DATE 3-28-25

SHEET TITLE
COVER SHEET PACKAGE 3 VOL 1

DRAWN CWD

REVIEW KAC

COVER 1

JOHNSON HALL RENOVATION - PKG 3 VOL 2

JOHNSON HALL RENOVATION & FOSTER DEMOLITION

SBC N^{O} 364/011-04-2022CM

TENNESSEE TECHNOLOGICAL UNIVERSITY COOKEVILLE, PUTNAM COUNTY, TN

JOHNSON HALL
1105 N. PEACHTREE AVE.
COOKEVILLE, TN 38501

REGULATORY REQUIREMENTS

LISTED BELOW ARE THE REGULATORY REQUIREMENTS THAT APPLY TO THIS PROJECT, REFER TO SECTION 01 41 14 REGULATORY REQUIREMENTS. THIS LIST IS PROVIDED AS A CONVENIENCE TO THE CONTRACTOR AND IS NOT TO BE CONSIDERED ALL INCLUSIVE OF CODES AND REGULATIONS THAT MAY APPLY. THE CONTRACTOR SHALL COMPLY WITH ALL PERTINENT CODES, STANDARDS, REGULATIONS AND LAWS.

(A) INTERNATIONAL BUILDING CODE (IBC), 2012 EDITION, PUBLISHED BY THE INTERNATIONAL CODE COUNCIL (ICC), EXCEPT FOR:
  1. CHAPTER 11 ACCESSIBILITY; AND,
  2. CHAPTER 34, SECTION 3411 ACCESSIBILITY FOR EXISTING BUILDINGS;
(B) THE INTERNATIONAL FUEL GAS CODE (IFGC), 2012 EDITION, PUBLISHED BY THE INTERNATIONAL CODE COUNCIL (ICC);
(C) THE INTERNATIONAL MECHANICAL CODE (IMC), 2012 EDITION, PUBLISHED BY THE INTERNATIONAL CODE COUNCIL (ICC);
(D) THE INTERNATIONAL PLUMBING CODE (IPC), 2012 EDITION, PUBLISHED BY THE INTERNATIONAL CODE COUNCIL (ICC);
(E) THE INTERNATIONAL PROPERTY MAINTENANCE CODE (IPMC), 2012 EDITION, PUBLISHED BY THE INTERNATIONAL CODE COUNCIL (ICC);
(F) THE INTERNATIONAL FIRE CODE (IFC), 2012 EDITION, PUBLISHED BY THE INTERNATIONAL CODE COUNCIL (ICC);
(G) THE INTERNATIONAL ENERGY CONSERVATION CODE (IECC), 2012 EDITION, PUBLISHED BY THE INTERNATIONAL CODE COUNCIL (ICC), EXCEPT THAT THE PROVISIONS OF THE INTERNATIONAL ENERGY CONSERVATION CODE, 2006 EDITION, SHALL APPLY TO THE FOLLOWING OCCUPANCY CLASSIFICATIONS AS DEFINED BY THE INTERNATIONAL BUILDING CODE (IBC), 2012 EDITION:
  1. MODERATE-HAZARD FACTORY INDUSTRIAL, GROUP F-1;
  2. LOW-HAZARD FACTORY INDUSTRIAL, GROUP F-2;
  3. MODERATE-HAZARD STORAGE, GROUP S-1; AND,
  4. LOW-HAZARD STORAGE, GROUP S-2;
(H) THE INTERNATIONAL EXISTING BUILDING CODE (IEBC), 2012 EDITION, PUBLISHED BY THE INTERNATIONAL CODE COUNCIL (ICC);
(I) FOR STATE BUILDINGS, EDUCATIONAL OCCUPANCIES AND ANY OTHER OCCUPANCY REQUIRING AN INSPECTION BY THE STATE FIRE MARSHAL FOR INITIAL LICENSURE, NFPA 101 LIFE SAFETY CODE, 2012 EDITION, PUBLISHED BY THE NATIONAL FIRE PROTECTION ASSOCIATION (NFPA);
(J) NO PROVISION OF THE PRECEDING CITED PUBLICATIONS SHALL BE ADOPTED THAT CONFLICTS WITH:
  1. THE INSTALLATION AND SERVICE STANDARDS OF PORTABLE FIRE EXTINGUISHERS AND FIXED FIRE EXTINGUISHER SYSTEMS IN TENN. COMP. R. & REGS. 0780-02-14-.02;
  2. THE STANDARDS FOR ENGAGING IN THE LIQUEFIED PETROLEUM GAS BUSINESS IN TENN. COMP. R. & REGS. 0780-02-17-.02.
(K) NATIONAL ELECTRIC CODE, NFPA 70, 2017 EDITION, PUBLISHED BY THE NATIONAL FIRE PROTECTION ASSOCIATION.
(L) TENNESSEE PUBLIC BUILDING ACCESSIBILITY ACT 2010 ADA STANDARDS FOR ACCESSIBLE DESIGN
(M) NFPA 13

CODE DATA

OCCUPANCY TYPE - B - BUSINESS (IBC 2012 SECTION 304.1)
A-3 - ASSEMBLY GROUP (IBC 2012 SECTION 303.4)

CONSTRUCTION TYPE - IIB SPRINKLERED (IBC TABLES 503/601)
RISK CATEGORY - III - BUILDINGS AND OTHER STRUCTURES CONTAINING ADULT EDUCATION FACILITIES, SUCH AS COLLEGES AND UNIVERSITIES, WITH AN OCCUPANT LOAD GREATER THAN 500.

ALLOWABLE BUILDING AREA (IBC 2012 TABLE 503)
BASE ALLOWABLE AREA: IIB - BUSINESS = 23,000 SQ. FT.
BASE ALLOWABLE AREA: IIB - ASSEMBLY A-3 = 9,500 SQ. FT.

MAX ALLOWABLE AREAS:
BUSINESS = 86,250 SQ. FT. (SEE FLOOR AREA PER OCCUPANCY ON LIFE SAFETY SHEETS FOR CALCULATIONS)
ASSEMBLY A-3 (LECTURE HALLS) = 35,625 SQ. FT. (SEE FLOOR AREA PER OCCUPANCY ON LIFE SAFETY SHEETS FOR CALCULATIONS)

ACTUAL AREAS:
1ST FLOOR: EXISTING 18,944 SF + NEW 2,450 SF + COVERED 1,343 SF = 22,737 SF
2ND FLOOR: EXISTING 17,080 SF + NEW 2,548 SF + COVERED 162 SF = 19,790 SF
3RD FLOOR: EXISTING 17,080 SF + NEW 2,296 SF + COVERED 162 SF = 19,538 SF
4TH FLOOR: EXISTING 14,874 SF + NEW 2,296 SF + COVERED 162 SF = 17,322 SF

TOTAL: EXISTING 67,978 SF + NEW 9,590 SF + COVERED 1,829 SF = 79,387 SF

BUSINESS OCCUPANCY TOTAL: 69,912 SF
A-3 ASSEMBLY OCCUPANCY TOTAL: 9,475 SF

CODE DATA CONTINUED

SEISMIC DATA
SITE CLASS = C
SEISMIC DESIGN CATEGORY = B
RISK CATEGORY III
SEE STRUCTURAL SHEETS FOR MORE INFORMATION

HEIGHT CALCULATIONS
MAX ALLOWABLE HEIGHT: 55' (75' INCLUDING INCREASE ALLOWED BY IBC 2012 504.2)
ACTUAL HEIGHT OF BUILDING: 59'
MAX ALLOWABLE STORIES: 3 (4 INCLUDING INCREASED ALLOWED BY IBC 2012 504.2)
ACTUAL NUMBER OF STORIES: 4

WIND EXPOSURE CATEGORY - B

WIND RISK CATEGORY - II

IECC CLIMATE ZONE - 4A IECC 2012 FIGURE C301.1

REVISIONS PER CHANGE ORDERS AND SUPPLEMENTAL INSTRUCTIONS

TYPE (CO / SI)	DATE	DESCRIPTION OF WORK
ADDENDUM #1	5-16-25	FIRE MARSHAL COMMENTS AND MISC. ITEMS
ADDENDUM #3	6-11-25	FIRE MARSHAL COMMENTS AND MISC. ITEMS
ADDENDUM #5	6-24-25	MISC ADDENDUM ITEMS

INDEX TO DRAWINGS

Sheet Number	Sheet Name	Sheet Issue Date	Current Revision	Current Revision Date
GENERAL SHEETS				
COVER 2	COVER SHEET PACKAGE 3 VOL 2	03-28-25	8	6-24-25
MECHANICAL DRAWINGS				
M0.1	MECHANICAL NOTES AND SCHEDULES	03-28-25		
M0.2	MECHANICAL NOTES AND SCHEDULES	03-28-25		
M0.3	MECHANICAL CONTROLS	03-28-25		
M0.4	STEAM SYSTEM SCHEMATIC	03-28-25		
M0.5	MECHANICAL DETAILS	03-28-25		
M0.6	MECHANICAL DETAILS	03-28-25		
M1.1	FIRST FLOOR MECHANICAL PLAN	03-28-25	2	6-11-25
M1.2	SECOND FLOOR MECHANICAL PLAN	03-28-25	2	6-11-25
M1.3	THIRD FLOOR MECHANICAL PLAN	03-28-25	2	6-11-25
M1.4	FOURTH FLOOR MECHANICAL PLAN	03-28-25	1	5-16-25
M1.5	MEZZANINE MECHANICAL PLAN	03-28-25	1	5-16-25
M2.0	BASEMENT MECHANICAL PLAN	03-28-25		
M2.1	FIRST FLOOR MECHANICAL PIPING PLAN	03-28-25	2	6-11-25
M2.2	SECOND FLOOR MECHANICAL PIPING PLAN	03-28-25	2	6-11-25
M2.3	THIRD FLOOR MECHANICAL PIPING PLAN	03-28-25	2	6-11-25
M2.4	FOURTH FLOOR MECHANICAL PIPING PLAN	03-28-25		
PLUMBING DRAWINGS				
P0.1	PLUMBING NOTES AND SCHEDULES	03-28-25	1	5-16-25
P0.2	PLUMBING DETAILS	03-28-25		
P0.3	PLUMBING DETAILS	03-28-25		
P1.0	BASEMENT PLUMBING PLAN	03-28-25		
P1.1	FIRST FLOOR SANITARY SEWER PLAN	03-28-25	2	6-11-25
P1.2	SECOND FLOOR SANITARY SEWER PLAN	03-28-25	2	6-11-25
P1.3	THIRD FLOOR SANITARY SEWER PLAN	03-28-25	2	6-11-25
P1.4	FOURTH FLOOR SANITARY SEWER PLAN	03-28-25		
P1.5	SANITARY SEWER ROOF PLAN	03-28-25		
P1.6	SANITARY SEWER ENLARGEMENTS AND ISOMETRICS	03-28-25		
P1.7	SANITARY SEWER ENLARGEMENTS AND ISOMETRICS	03-28-25		
P1.8	SANITARY SEWER ENLARGEMENTS AND ISOMETRICS	03-28-25		
P1.9	SANITARY SEWER ISOMETRIC - WEST	03-28-25		
P1.10	SANITARY SEWER ISOMETRIC - EAST	03-28-25		
P2.1	FIRST FLOOR DOMESTIC WATER PLAN	03-28-25	2	6-11-25
P2.2	SECOND FLOOR DOMESTIC WATER PLAN	03-28-25	2	6-11-25
P2.3	THIRD FLOOR DOMESTIC WATER PLAN	03-28-25	2	6-11-25
P2.4	FOURTH FLOOR DOMESTIC WATER PLAN	03-28-25		
P2.5	DOMESTIC WATER ENLARGEMENTS AND ISOMETRICS	03-28-25		
P2.6	DOMESTIC WATER ENLARGEMENTS AND ISOMETRICS	03-28-25		
P2.7	DOMESTIC WATER ENLARGEMENTS AND ISOMETRICS	03-28-25		
P2.8	DOMESTIC WATER ISOMETRIC - WEST	03-28-25		
P2.9	DOMESTIC WATER ISOMETRIC - EAST	03-28-25		
FIRE PROTECTION DRAWINGS				
FP0.1	FIRE PROTECTION NOTES AND SCHEDULES	03-28-25		
FP0.2	FIRE PROTECTION DETAILS	03-28-25		
FP1.0	BASEMENT FIRE PROTECTION PLAN	03-28-25		
FP1.1	FIRST FLOOR FIRE PROTECTION PLAN	03-28-25	2	6-11-25
FP1.2	SECOND FLOOR FIRE PROTECTION PLAN	03-28-25	2	6-11-25
FP1.3	THIRD FLOOR FIRE PROTECTION PLAN	03-28-25	3	6-24-25
FP1.4	FOURTH FLOOR FIRE PROTECTION PLAN	03-28-25	1	5-16-25
FP1.5	FIRE PROTECTION ENLARGEMENT	03-28-25		
FP1.6	OVERALL FIRE PROTECTION ISOMETRIC	03-28-25		
FR0.1	FIRE RATING	03-28-25		
FA0.1	LEGENDS & SCHEDULES	03-28-25	1	5-16-25
FA1.1	FIRST FLOOR FIRE ALARM PLAN	03-28-25	2	6-11-25
FA1.2	SECOND FLOOR FIRE ALARM PLAN	03-28-25	2	6-11-25
FA1.3	THIRD FLOOR FIRE ALARM PLAN	03-28-25	2	6-11-25
FA1.4	FOURTH FLOOR FIRE ALARM PLAN	03-28-25	1	5-16-25
ELECTRICAL DRAWINGS				
E0.1	ELECTRICAL NOTES AND LEGENDS	03-28-25	3	6-24-25
E0.2	ELECTRICAL DETAILS	03-28-25		
E0.3	LIGHTING SCHEDULES & DETAILS	03-28-25	1	5-16-25
E0.4	LIGHTING CONTROL DETAILS	03-28-25	1	5-16-25
E1.0	ELECTRICAL SITE PLAN	03-28-25	1	5-16-25
E1.1	FIRST FLOOR POWER PLAN	03-28-25	3	6-24-25
E1.2	SECOND FLOOR POWER PLAN	03-28-25	2	6-11-25
E1.3	THIRD FLOOR POWER PLAN	03-28-25	2	6-11-25
E1.4	FOURTH FLOOR POWER PLAN	03-28-25	1	5-16-25
E1.5	MEZZANINE POWER PLAN	03-28-25	1	5-16-25
E2.1	FIRST FLOOR LIGHTING PLAN	03-28-25	2	6-11-25
E2.2	SECOND FLOOR LIGHTING PLAN	03-28-25	2	6-11-25
E2.3	THIRD FLOOR LIGHTING PLAN	03-28-25	2	6-11-25
E2.4	FOURTH FLOOR LIGHTING PLAN	03-28-25	1	5-16-25
E2.5	MEZZANINE LIGHTING PLAN	03-28-25	1	5-16-25
E2.6	STAIRWAY LIGHTING PLANS	03-28-25		
E2.7	EXTERIOR LIGHTING PLANS	03-28-25	1	5-16-25
E3.1	LIGHTNING PROTECTION PLAN	03-28-25		
E4.1	ELECTRICAL RISER DIAGRAM	03-28-25	3	6-24-25
E4.2	ELECTRICAL PANEL SCHEDULES	03-28-25		
E4.3	ELECTRICAL PANEL SCHEDULES	03-28-25	1	5-16-25
E4.4	ELECTRICAL PANEL SCHEDULES	03-28-25		
TECHNOLOGY DRAWINGS				
T0.1	TECHNOLOGY NOTES AND LEGENDS	03-28-25		
T0.2	TECHNOLOGY DETAILS	03-28-25		
T0.3	TECHNOLOGY DETAILS	03-28-25		
T0.4	TECHNOLOGY DETAILS	03-28-25		
T1.0	TECHNOLOGY SITE PLAN	03-28-25	3	6-24-25
T1.1	FIRST FLOOR COMMUNICATION PLAN	03-28-25	2	6-11-25
T1.2	SECOND FLOOR COMMUNICATIONS PLAN	03-28-25	2	6-11-25
T1.3	THIRD FLOOR COMMUNICATIONS PLAN	03-28-25	2	6-11-25
T1.4	FOURTH FLOOR COMMUNICATIONS PLAN	03-28-25		
T2.1	FIRST FLOOR SECURITY PLAN	03-28-25	2	6-11-25
T2.2	SECOND FLOOR SECURITY PLAN	03-28-25	2	6-11-25
T2.3	THIRD FLOOR SECURITY PLAN	03-28-25	2	6-11-25
T2.4	FOURTH FLOOR SECURITY PLAN	03-28-25		
T3.1	FIRST FLOOR AUDIO VISUAL PLAN	03-28-25	2	6-11-25
T3.2	SECOND FLOOR AUDIO VISUAL PLAN	03-28-25	2	6-11-25
T3.3	THIRD FLOOR AUDIO VISUAL PLAN	03-28-25	2	6-11-25
T3.4	FOURTH FLOOR AUDIO VISUAL PLAN	03-28-25		
T4.1	TELECOMMUNICATIONS ENLARGED PLANS	03-28-25		
T5.1	TELECOMMUNICATIONS RISER DIAGRAM	03-28-25		
T5.2	SECURITY RISER DIAGRAM	03-28-25		
T6.1	TELECOMMUNICATIONS NETWORK RACK ELEVATIONS	03-28-25		

UPDATED CURRENT REVISION MARKS AND DATES ON INDEX TO DRAWINGS

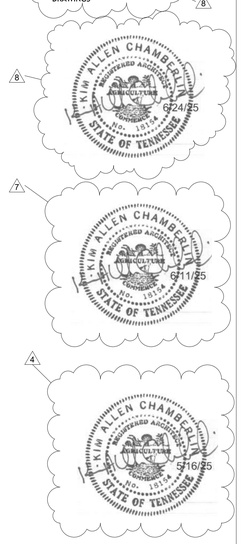

FIRE RESISTANCE

FIRE RESISTANCE RATING REQUIREMENTS

IBC 2012 - TABLE 601

BUILDING ELEMENTS	TYPE II-B
PRIMARY STRUCTURAL FRAME	0
BEARING WALLS - EXTERIOR ($^{f,\ g}$)	0
BEARING WALLS - INTERIOR	0
NON-BEARING WALLS & PARTITIONS (EXTERIOR)	0
NON-BEARING WALLS & PARTITIONS (INTERIOR)	0
FLOOR CONSTRUCTION & ASSOCIATED SECONDARY MEMBERS	0
ROOF CONSTRUCTION & ASSOCIATED SECONDARY MEMBERS	0

f. NOT LESS THAN THE FIRE-RESISTANCE RATING BASED ON FIRE SEPARATION DISTANCE (SEE TABLE 602).

g. NOT LESS THAN THE FIRE-RESISTANCE RATING AS REFERENCED IN SECTION 704.10.

IBC TABLE 602 - FIRE SEPARATION DISTANCE IS GREATER THAN 30'.

INTERIOR FINISHES

803.1.1 INTERIOR WALL AND CEILING FINISH MATERIALS
INTERIOR WALL AND CEILING FINISH MATERIALS SHALL BE CLASSIFIED IN ACCORDANCE WITH ASTM E 84 OR UL 723. SUCH INTERIOR FINISH MATERIALS SHALL BE GROUPED IN THE FOLLOWING CLASSES IN ACCORDANCE WITH THEIR FLASH SPREAD AND SMOKE-DEVELOPED INDEXES:

CLASS A: = FLAME SPREAD INDEX 0-25; SMOKE-DEVELOPED INDEX 0-450.
CLASS B: = FLAME SPREAD INDEX 26-75; SMOKE-DEVELOPED INDEX 0-450.
CLASS C: = FLAME SPREAD INDEX 76-200; SMOKE-DEVELOPED INDEX 0-450.

REQUIRED BY OCCUPANCY

GROUP A-3 (SPRINKLERED):	CLASS
INTERIOR EXIT PASSAGEWAYS:	B
CORRIDORS:	B
ROOMS AND ENCLOSED SPACES	C

GROUP B (SPRINKLERED):	CLASS
INTERIOR EXIT PASSAGEWAYS:	B
CORRIDORS:	C
ROOMS AND ENCLOSED SPACES:	C

FIRE-RATED SEPARATION NOTES:

REQUIRED SEPARATIONS BETWEEN OCCUPANCIES
REQUIRED SEPARATIONS BETWEEN OCCUPANCIES PER IBC 2012 TABLE 508.4. BETWEEN B AND A-3 (SPRINKLED) - 1 HOUR

CORRIDOR SEPARATION (WITH SPRINKLER FOR A AND B OCCUPANCIES): NO RATING (IBC TABLE 1018.1).

WINDOWS IN RATED APPLICATIONS
AUTOMATIC SPECIAL-PURPOSE SPRINKLER SYSTEM USED IN CONJUNCTION WITH FIXED GLAZED WALL ASSEMBLY TO PROVIDE AN ALTERNATIVE TO A TWO-HOUR FIRE-RESISTANCE-RATED NONLOAD-BEARING INTERIOR FIRE BARRIER ASSEMBLY PRESCRIBED IN IBC SECTION 707 PER ICC-ES EVALUATION REPORT ESR-2397. APPLICABLE FOR FIRE BARRIERS AND EXTERIOR WALL FOR UP TO 2-HOUR FIRE-RESISTANCE RATING (ICC-ES ESR-2397 3.1, 5.3).

ATRIUM SPRINKLER PROTECTION
ATRIUM SPACES SHALL BE SEPARATED FROM ADJACENT SPACES BY A 1-HOUR FIRE BARRIER CONSTRUCTED IN ACCORDANCE WITH SECTION 909. (IBC 2012 - 404.6)

A FIRE BARRIER IS NOT REQUIRED WHERE A GLASS WALL FORMING A SMOKE PARTITION IS PROVIDED. SPRINKLERS MUST BE PROVIDED ON THE ROOM SIDE ONLY IF THERE IS NO WALKWAY ON THE ATRIUM SIDE OF THE GLASS, GLASS WALLS MUST BE IN A GASKETED FRAME, AND GLASS DOORS SHALL BE SELF-CLOSING. (IBC 404.6 EXCEPTION 1, 1.1-1.3)

SMOKE CONTROL IS NOT REQUIRED FOR ATRIUMS THAT CONNECT ONLY TWO STORIES. (IBC 2012 - 404.5 EXCEPTION). THE THIRD FLOOR OF THE BUILDING IS SEALED OFF FROM THE ATRIUM. THE ATRIUM IS ONLY CONNECTING THE FIRST AND SECOND STORIES.

OPENINGS IN EXTERIOR WALLS
IBC 2012 - 705.8.2 EXCEPTION: OPENING PROTECTIVES ARE NOT REQUIRED WHERE THE BUILDING IS EQUIPPED THROUGHOUT WITH AN AUTOMATIC SPRINKLER SYSTEM IN ACCORDANCE WITH SECTION 903.3.1.1 AND THE EXTERIOR OPENINGS ARE PROTECTED BY A WATER CURTAIN USING AUTOMATIC SPRINKLERS APPROVED FOR THAT USE.

PROJECT SUMMARY STATEMENT

EXISTING BUILDING RENOVATION OF AN EDUCATIONAL FACILITY WITH A TYPE II-B CONSTRUCTION. RENOVATION WILL UPDATE OUTDATED MECHANICAL AND ELECTRICAL AND INTERIOR ARCHITECTURAL ELEMENTS. NEW BUILDING ADDITIONS WILL BE ADDED TO INCREASE CIRCULATION AND EGRESS AND FREEUP PROGRAM SPACE IN THE BUILDING CORE. PROJECT SCOPE WILL ALSO INCLUDE MINOR LANDSCAPING AND GRADING TO ENHANCE BUILDING FRONTAGE.

RESPONDING FIRE DEPARTMENT

COOKEVILLE FIRE DEPARTMENT
P.O. BOX 998 - 45 EAST BROAD STREET
COOKEVILLE, TN 38503-0998
PHONE: 931-520-5236

LOCAL BUILDING INSPECTOR

COOKEVILLE CITY INSPECTOR - JEREMY GLASCOCK
45 EAST BROAD STREET
COOKEVILLE, TN 38501
PHONE: 931-520-5268

DESIGN TEAM

CIVIL ENGINEER	ASSOCIATED ARCHITECT	STRUCTURAL ENGINEER	MECHANICAL ENGINEER	PLUMBING ENGINEER	ELECTRICAL ENGINEER
CIVIL ENGINEERING & SURVEYING	UPLAND DESIGN GROUP, INC.	LOGAN PATRI ENGINEERING	MAFFETT LOFTIS ENGINEERING	MAFFETT LOFTIS ENGINEERING	MAFFETT LOFTIS ENGINEERING
214 E. STEVENS STREET COOKEVILLE, TN 38501 PHONE: 931-528-5266	P.O. BOX 1026 CROSSVILLE, TN 38555 PHONE: 931-484-7541 FAX: 931-484-2351	630 SOUTHGATE AVE, SUITE C NASHVILLE, TN 37203 PHONE: 615-726-2902	1 SOUTH JEFFERSON AVE, SUITE 101 COOKEVILLE, TN 38501 PHONE: 931-526-5143 FAX: 931-526-5153	1 SOUTH JEFFERSON AVE, SUITE 101 COOKEVILLE, TN 38501 PHONE: 931-526-5143 FAX: 931-526-5153	1 SOUTH JEFFERSON AVE, SUITE 101 COOKEVILLE, TN 38501 PHONE: 931-526-5143 FAX: 931-526-5153
WWW.CES-TN.COM	WWW.UPLANDDESIGNGROUP.COM	WWW.LOGANPATRIENGINEERING.COM	WWW.MAFFETT-LOFTIS.COM	WWW.MAFFETT-LOFTIS.COM	WWW.MAFFETT-LOFTIS.COM
3-28-25	3/28/25	03/28/2025	03/28/2025	03/28/2025	03/28/2025

COMMUNITY TECTONICS ARCHITECTS
7610 Gleason Road Knoxville, TN 37919
Ph. (865) 637-0890 www.communitytectonics.com

Upland Design Group
P.O. Box 1026 Crossville, TN 38557
Ph. (931) 484-7541 www.uplanddesigngroup.com

W&O Construction
150 Construction Drive Livingston, TN 38570
Ph. (931) 403-1000 www.wocc.com

PROJECT
JOHNSON HALL RENOVATION - PKG 3
JOHNSON HALL RENOVATION & FOSTER DEMOLITION
SBC N° 364/011-04-2022CM

OWNER: TENNESSEE TECH. UNIVERSITY
LOCATION: COOKEVILLE, TN

SEAL

NO.	DESCRIPTION	DATE
4	Addendum 1 - PKG 3	5-16-25
7	Addendum 3 - PKG 3	6-11-25
8	Addendum 5 - PKG 3	6-24-25

JOB NO. 22025

ISSUE DATE 3-28-25

SHEET TITLE
COVER SHEET PACKAGE 3 VOL 2

DRAWN CWD

REVIEW KAC

COVER 2

SITE CLEARING & DEMOLITION NOTES:

1. BEFORE STARTING DEMOLITION OPERATIONS, REFER TO CAMPUS NOTICE OF INTENT AND STORM WATER POLLUTION PREVENTION PLAN.

2. DEMOLITION INCLUDES THE FOLLOWING WITHIN THE LIMITS OF DISTURBANCE. SEE C3.1:
   1) TRANSFER BENCHMARK CONTROL TO NEW LOCATIONS OUTSIDE THE DISTURBED AREA PRIOR TO COMMENCING DEMOLITION OPERATIONS (WHEN APPLICABLE)
   2) PROVIDE TEMPORARY BARRICADES AND OTHER FORMS OF PROTECTION AS REQUIRED TO PROTECT OWNER'S PERSONNEL PROPERTY AND GENERAL PUBLIC FROM INJURY DUE TO DEMOLITION WORK.
   3) DEMOLITION AND REMOVAL OF EXISTING SITE FEATURES.
   4) DISCONNECTING, CAPPING OR SEALING, AND ABANDONING/REMOVING SITE UTILITIES IN PLACE (WHICHEVER IS APPLICABLE)

3. PROMPTLY REMOVE WASTE MATERIALS AND OTHER CLEARING DEBRIS FROM PROPERTY AND DISPOSE OF OFF SITE AT A TDEC PERMITTED SITE.

4. REMOVE AND LEGALLY DISPOSE OF ITEMS EXCEPT THOSE INDICATED TO BE REINSTALLED, SALVAGED, OR TO REMAIN.

5. EXISTING FOUNDATIONS AND UTILITIES MAY BE ENCOUNTERED ACROSS THE SITE. IF ENCOUNTERED, THESE ITEMS MAY REQUIRE REMOVAL AS INDICATED ON THE DRAWINGS, RESULTING EXCAVATIONS SHOULD BE BACKFILLED WITH PROPERLY COMPACTED SELECT FILL.

6. REMOVAL INCLUDES DIGGING OUT STUMPS AND ROOTS. REMOVE ALL STUMPS, ROOTS OVER 4-INCHES IN DIAMETER AND MATTED ROOTS WITHIN THE LIMITS OF GRUBBING TO DEPTHS AS FOLLOWS:
   1) FOOTINGS: 18 INCHES
   2) WALKS: 12 INCHES
   3) ROADS: 18 INCHES
   4) PARKING AREAS: 12 INCHES
   5) LAWN AREAS: 18 INCHES
   6) FILLS: 12 INCHES

7. REMOVE, REINSTALL, AND RELOCATE: ITEMS INDICATED; CLEAN, SERVICE, AND OTHERWISE PREPARE THEM FOR REUSE; STORE AND PROTECT AGAINST DAMAGE, REINSTALL ITEMS IN LOCATIONS INDICATED.

8. PROVIDE PROTECTION NECESSARY TO PREVENT DAMAGE TO EXISTING IMPROVEMENTS INDICATED TO REMAIN IN PLACE. PROTECT BENCHMARKS, EXISTING STRUCTURES, ROADS, SIDEWALKS, PAVING AND CURBS AGAINST DAMAGE FROM VEHICULAR OR FOOT TRAFFIC.
   1) PROTECT IMPROVEMENTS ON ADJOINING PROPERTIES AND ON THE OWNER'S PROPERTY.
   2) RESTORE DAMAGED IMPROVEMENTS TO THEIR ORIGINAL CONDITION, AS ACCEPTABLE TO PARTIES HAVING JURISDICTION.

9. CONTRACTOR SHALL SUPPLY TOPSOIL AS NECESSARY TO MEET LANDSCAPE/LAWN NEEDS.

10. COMPLY WITH APPLICABLE REQUIREMENTS OF FEDERAL, STATE AND LOCAL LAWS, REGULATIONS AND CODES OF THE AUTHORITIES HAVING JURISDICTION FOR THE DISPOSAL OF TREES, SHRUBS AND OTHER CLEARED MATERIAL.

11. CONDUCT SITE CLEARING OPERATIONS TO ENSURE MINIMUM INTERFERENCE WITH ROADS, STREETS, WALKS AND OTHER ADJACENT OCCUPIED OR USED FACILITIES. DO NOT CLOSE OR OBSTRUCT STREETS, WALKS OR OTHER OCCUPIED OR USED FACILITIES WITHOUT PERMISSION FROM AUTHORITIES HAVING JURISDICTION.

12. OBTAIN APPROVED BORROW SOIL MATERIALS OFF-SITE WHEN SUFFICIENT SATISFACTORY SOIL MATERIALS ARE NOT AVAILABLE ON-SITE.

13. MAINTAIN EXISTING UTILITIES INDICATED TO REMAIN IN SERVICE AND PROTECT THEM AGAINST DAMAGE THROUGHOUT CONSTRUCTION OPERATIONS.
   1) DO NOT INTERRUPT EXIST UTILITIES SERVING OCCUPIED OR OPERATING FACILITIES, EXCEPT WHEN AUTHORIZED IN WRITING BY ENGINEER AND AUTHORITIES HAVING JURISDICTION. PROVIDE TEMPORARY SERVICES DURING INTERRUPTIONS TO EXISTING UTILITIES, AS ACCEPTABLE TO OWNER AND TO GOVERNING AUTHORITIES.
   2) CONTRACTOR SHALL COORDINATE WITH APPROPRIATE UTILITY OWNER WHEN DISCONNECTING, REMOVING, OR RELOCATING EXISTING UTILITY SERVICES.

14. CONDUCT DEMOLITION OPERATIONS TO PREVENT INJURY TO PEOPLE AND DAMAGE TO ADJACENT BUILDINGS AND FACILITIES TO REMAIN. ENSURE SAFE PASSAGE OF PEOPLE AROUND DEMOLITION AREA.
   1) ERECT TEMPORARY PROTECTION, BARRICADES AS PER LOCAL GOVERNING AUTHORITIES.
   2) PROTECT EXISTING SITE IMPROVEMENTS AND APPURTENANCES TO REMAIN.

15. PROTECT EXISTING TREES AND OTHER VEGETATION INDICATED TO REMAIN IN PLACE, AGAINST UNNECESSARY CUTTING, BREAKING OR SKINNING OF ROOTS, SKINNING AND BRUISING OF BARK, SMOTHERING OF TREES BY STOCKPILING CONSTRUCTION MATERIALS OR EXCAVATED MATERIALS WITHIN DRIP LINE, EXCESS FOOT OR VEHICULAR TRAFFIC OR PARKING OF VEHICLES WITHIN DRIP LINE. PROVIDE TEMPORARY GUARDS TO PROTECT TREES AND VEGETATION TO REMAIN IN PLACE.
   1) PROTECT TREE ROOT SYSTEMS FROM DAMAGE DUE TO DELETERIOUS MATERIALS CAUSED BY RUN-OFF OR SPILLAGE DURING MIXING, USE OR DISCARDING OF CONSTRUCTION MATERIALS OR DRAINAGE FROM STORED MATERIALS. PROTECT ROOT SYSTEMS FROM COMPACTION, FLOODING, EROSION OR EXCESSIVE WETTING.
   2) ENGAGE A QUALIFIED TREE SURGEON TO REMOVE BRANCHES FROM TREES, IF REQUIRED, TO CLEAR FOR NEW CONSTRUCTION, WHERE CUTTING IS REQUIRED. TREE SURGEON SHALL CUT BRANCHES AND ROOTS WITH SHARP PRUNING INSTRUMENTS; DO NOT BREAK OR CHOP.

16. EXPLOSIVES: NO EXPLOSIVES SHALL BE STORED ON SITE.

17. REMOVE AND TRANSPORT DEBRIS IN A MANNER THAT WILL PREVENT SPILLAGE ON ADJACENT SURFACES AND AREAS.

18. CLEAN ADJACENT BUILDINGS AND IMPROVEMENT OF DUST, DIRT, AND DEBRIS CAUSED BY DEMOLITION OPERATIONS. RETURN ADJACENT AREAS TO CONDITION EXISTING BEFORE START OF DEMOLITION.

19. DAMAGES: PROMPTLY REPAIR DAMAGES TO ADJACENT FACILITIES CAUSED BY DEMOLITION OPERATIONS AT THE CONTRACTORS COST.

20. REMOVE EXISTING ABOVE-GRADE AND BELOW-GRADE IMPROVEMENTS NECESSARY TO PERMIT CONSTRUCTION AND OTHER WORK AS INDICATED.

21. GENERAL: PROMPTLY DISPOSE OF DEMOLISHED MATERIALS. DO NOT ALLOW DEMOLISHED MATERIALS TO ACCUMULATE ON-SITE.

22. DO NOT BURN OR BURY MATERIALS ON SITE.

23. CONTRACTOR TO SAWCUT EXISTING PAVEMENT PERPENDICULAR AND OR PARALLEL TO TRAFFIC FLOW.

24. IN TENNESSEE IT IS A REQUIREMENT PER "THE UNDERGROUND UTILITY DAMAGE PREVENTION ACT" THAT ANYONE WHO ENGAGES IN EXCAVATION MUST NOTIFY ALL KNOWN UTILITY OWNERS, NO LESS THAN THREE NOR MORE THAN TEN WORKING DAYS, PRIOR TO THEIR INTENDED EXCAVATION. A LIST OF THESE UTILITY OWNERS MAY BE OBTAINED FROM THE COUNTY REGISTER OF DEEDS. THOSE UTILITY OWNERS WHO PARTICIPATE IN THE TENNESSEE ONE CALL SYSTEM CAN BE NOTIFIED TOLL FREE AT 1-800-351-1111.

25. UTILITIES SHOWN ARE BASED ON VISUAL OBSERVATIONS AND UTILITY MARKINGS. CONTRACTOR SHALL CALL TN ONE CALL AND CONFIRM LOCATIONS PRIOR TO STARTING WORK.

26. CONTRACTOR SHALL PREVENT TRACKING ONTO ADJACENT ROADWAYS. SHOULD TRACKING OF EARTH HAPPEN, THE CONTRACTOR SHALL CLEAN THE AREA IMMEDIATELY.

27. CONTRACTOR MAY REUSE ONSITE AGGREGATE IF KEPT FREE OF ORGANIC MATERIAL.

28. CONTRACTOR TO SECURE SITE AT ALL TIMES. INSTALL TEMPORARY FENCING AS NECESSARY TO PROTECT SITE FROM ACCESS AND STUDENTS, FACULTY AND STAFF FROM HARM.

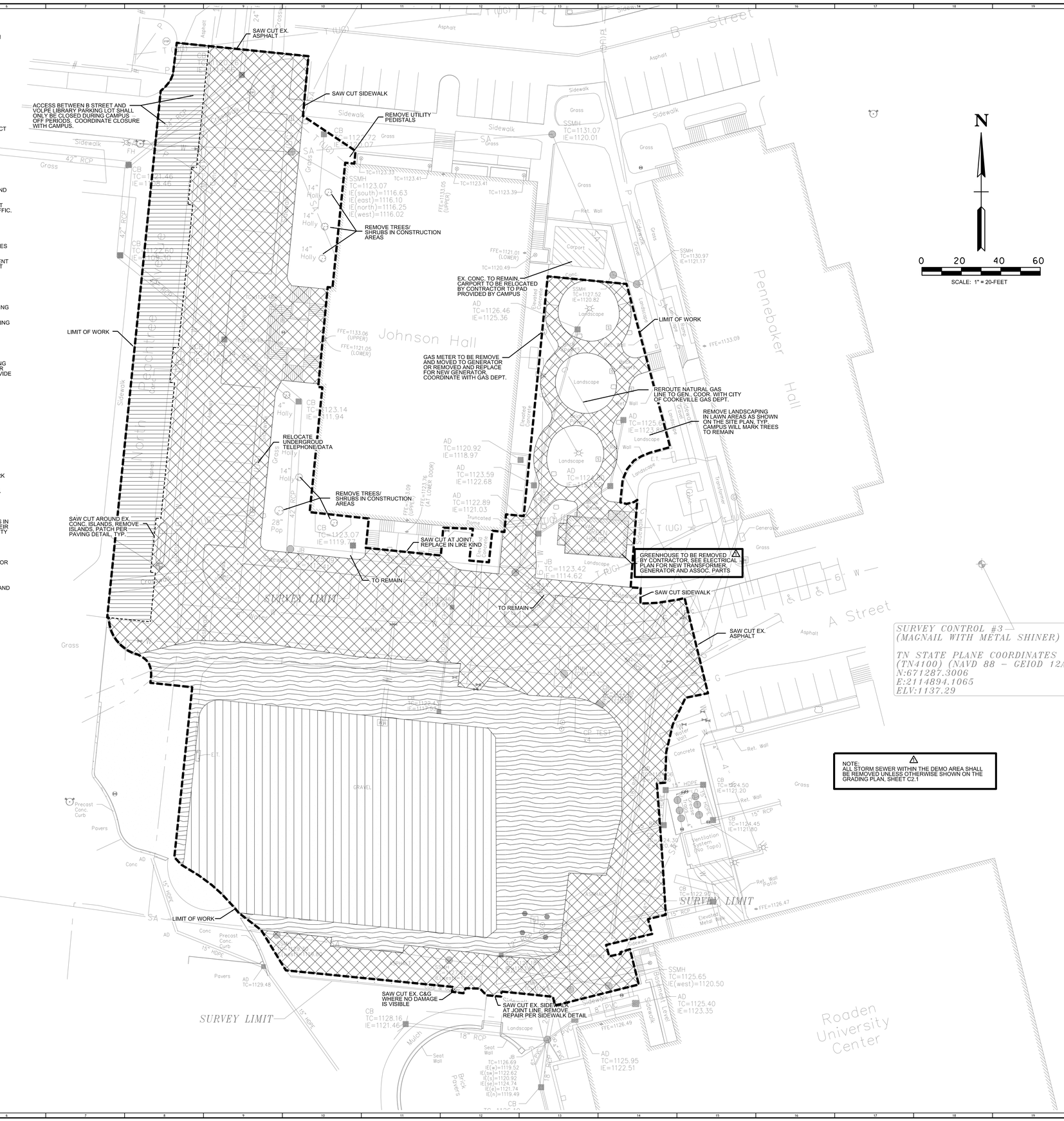

HARDSCAPE SHALL BE DEMOLISHED TO PROPOSED SUBGRADE.

MILL 1.5" FROM THIS AREA

FUTURE YARD AREA. GRAVEL TO BE REMOVE TO A DEPTH 18" BELOW PROPOSED GRADE OR TO A DEPTH TO SOIL MATERIAL, WHICHEVER IS LESS. A MINIMUM OF 8" OF TOPSOIL SHALL BE PLACED. AREA SHALL RECEIVE SEED, FERTILIZER, AND STRAW MULCH.

GRAVEL SHALL BE REMOVED TO A DEPTH OF 12" BELOW PROPOSED GRADE (10" IN LIGHT DUTY PAVE AREAS)

COMMUNITY TECTONICS ARCHITECTS
7810 Gleason Road, Knoxville, TN 37919
Ph: (865) 691-2680
www.communitytectonics.com

Upland Design Group
P.O. Box 1326, Crossville, TN 38557
Ph: (931) 484-7541
www.uplanddesigngroup.com

W&O Construction
150 Construction Drive, Livingston, TN 38570
Ph: (931) 403-1000
www.wocc.com

PROJECT
JOHNSON HALL RENOVATION - PKG 3
JOHNSON HALL RENOVATION & FOSTER DEMOLITION
SBC Nº 364/011-04-2022CM

OWNER: TENNESSEE TECH. UNIVERSITY
LOCATION: COOKEVILLE, TN

SEAL
DAVID SCOTT NICHOLSON, REGISTERED ENGINEER, No. 108288, STATE OF TENNESSEE
3-28-25

NO.	DESCRIPTION	DATE
1	ADDED SEWER & SYSTEM DEMO/REMOVAL NOTES	6-26-25

JOB NO.

ISSUE DATE: 3-28-25

SHEET TITLE: DEMO PLAN

DRAWN: DSN
REVIEW: DSN

C0.1

GRADING AND DRAINAGE PLAN NOTES:

1. THE SITE WORK CONTRACTOR SHALL COORDINATE THE INSTALLATION OF ALL UNDERGROUND UTILITIES WITH HIS WORK. ALL UNDERGROUND UTILITIES (WATER, SANITARY SEWER, STORM SEWER, GAS, ELECTRICAL CONDUIT, IRRIGATION SLEEVES, AND ANY OTHER MISCELLANEOUS UNDERGROUND UTILITIES, DEVICES, OR STRUCTURES), SHALL BE IN-PLACE PRIOR TO THE PLACEMENT OF BASE COURSE MATERIAL.

2. THE CONTRACTOR SHALL SAW CUT EXISTING PAVEMENT AS NECESSARY TO ASSURE A SMOOTH FIT AND CONTINUOUS GRADE.

3. THE CONTRACTOR SHALL VERIFY HORIZONTAL AND VERTICAL LOCATION OF ALL EXISTING SANITARY AND STORM SEWER STRUCTURES, PIPES AND ALL UTILITIES PRIOR TO CONSTRUCTION.

4. CLEARING AND GRUBBING LIMITS SHALL INCLUDE ALL AREAS DISTURBED BY GRADING OPERATION.

5. THE SOIL MATERIALS SHOWN HEREON MAY BE DISTURBED BY CUTTING OR FILLING OPERATIONS PERFORMED DURING OR BEFORE DEVELOPMENT. THEREFORE, THE BUILDER OF ANY PROPOSED STRUCTURE SHALL INVESTIGATE THE CURRENT CONDITIONS AND CONSULT WITH A GEOTECHNICAL EXPERT OR OTHER QUALIFIED PERSON AS HE DEEMS APPROPRIATE TO ASSURE HIMSELF THAT THE DESIGN OF THE PROPOSED FOUNDATION IS ADEQUATE.

6. EXCESS TOPSOIL, IF ANY, SHALL BE STOCKPILED FOR RE-USE. ADDITIONAL TOPSOIL WILL BE REQUIRED.

7. PRIOR TO SITE CONSTRUCTION ACTIVITY, THE CONTRACTOR SHALL INSTALL ALL SWPPP MEASURES TO PROTECT EXISTING DRAINAGE FACILITIES. CONTRACTOR SHALL PREVENT SILTATION FROM LEAVING THE SITE AT ALL TIMES.

8. STRIP BUILDING AND PAVEMENT AREAS OF ALL ORGANIC TOPSOILS. STOCKPILE SUITABLE TOPSOILS FOR RESPREADING ONTO LAWN AND LANDSCAPE AREAS.

9. THE CONTRACTOR SHALL BE RESPONSIBLE FOR REMOVING ALL SOFT, YIELDING OR UNSUITABLE MATERIALS AND REPLACING WITH SUITABLE MATERIALS

10. CONTRACTOR SHALL SUBMIT A COMPACTION REPORT PREPARED BY A LICENSED GEOTECHNICAL ENGINEER, VERIFYING THAT ALL FILLED AREAS AND SUBGRADE AREAS WITHIN THE BUILDING PAD AREA AND AREAS TO BE PAVED HAVE BEEN COMPACTED IN ACCORDANCE WITH THESE PLANS AND SPECIFICATIONS AND THE RECOMMENDATIONS SET FORTH IN THE GEOTECHNICAL ENGINEERING REPORT. NOTIFY PROJECT ENGINEER IF ANY UNSUITABLE SOILS ARE FOUND.

11. COMPACTION TESTING IS MANDATORY FOR PARKING LOT, BUILDING SLAB AND FOUNDATIONS SUB-GRADE.

12. BASE COURSE PAVEMENT SHALL BE COMPACTED TO 100% STANDARD PROCTOR.

13. IT IS THE EARTHWORK CONTRACTOR'S RESPONSIBILITY TO MAINTAIN THE SITE SOILS AND ENGINEERED FILLS WITH A WORKABLE MOISTURE CONTENT RANGE TO OBTAIN THE REQUIRED IN-PLACE DENSITY. SCARIFYING AND DRYING OPERATION SHOULD BE INCLUDED IN THE CONTRACTOR'S PRICE AND SHOULD NOT BE CONSIDERED AND EXTRA FOR THE CONTRACT.

14. FOLLOWING GRADING OF SUBSOIL TO SUBGRADE ELEVATIONS, THE CONTRACTOR SHALL PLACE A MINIMUM OF 9-INCHES OF TOPSOIL IN ALL DISTURBED AREAS WHICH ARE NOT TO BE PAVED. SMOOTHLY FINISH GRADE TO MEET SURROUNDING LAWN AREAS AND ENSURE POSITIVE DRAINAGE. STOCKPILED TOPSOIL SHALL BE SCREENED PRIOR TO RESPREADING. TOPSOILS SHALL BE FREE OF SUBSOIL, DEBRIS, BRUSH AND STONES LARGER THAN 1" IN ANY DIMENSION. ROCK HOUNDING IN PLACE WILL NOT BE PERMITTED. SEE LANDSCAPE PLAN FOR ADDITIONAL SITE STABILIZATION REQUIREMENTS.

15. IN AREAS TO HAVE LAWNS AND OR LANDSCAPING, THAT ARE CURRENTLY UNDER GRAVEL OR PAVEMENT, THE PAVEMENT AND STONE SHALL BE REMOVED TO A DEPTH OF 18" UNLESS SOIL MATERIAL IS ENCOUNTERED AT A LESSER DEPTH. IN NO CASE SHALL LESS THAN 9-INCHES OF TOPSOIL BE INSTALLED.

16. AFTER FINE GRADING TOPSOIL, CONTRACTOR SHALL STABILIZE WITH SEED, FERTILIZER AND MULCH. ON SLOPES 4:1 OR STEEPER, SLOPES SHALL RECEIVE EROSION BLANKETS. CONTRACTOR SHALL FERTILIZE AND WATER UNTIL THE PROJECT IS DEEMED SUBSTAINTIALLY COMPLETE. THE RESTORATION SHALL CLOSELY FOLLOW CONSTRUCTION. SEE LANDSCAPE PLAN FOR ADDITIONAL SITE STABILIZATION REQUIREMENTS.

17. ELEVATIONS GIVEN ARE AT BOTTOM FACE OF CURB AND/OR FINISHED PAVEMENT GRADE UNLESS OTHERWISE SPECIFIED ON GRADING PLAN. ALL PAVEMENT SHALL BE LAID ON A STRAIGHT, EVEN, AND UNIFORM GRADE WITH A MINIMUM OF 1.5% SLOPE TOWARD THE COLLECTION POINTS UNLESS OTHERWISE SPECIFIED ON THE GRADING PLAN. DO NOT ALLOW NEGATIVE GRADES OR PONDING OF WATER.

18. CONTRACTOR SHALL PROVIDE BUTT END JOINT TO MEET EXISTING PAVEMENT IN ELEVATION AT DRIVE RETURNS AND ENSURE POSITIVE DRAINAGE.

19. ALL PIPES UNDER PAVED AREAS SHALL BE BACKFILLED TO SUBGRADE WITH COMPACTED CRUSHED STONE.

20. FILL MATERIAL, IF REQUIRED, SHALL BE BORROWED AT THE CONTRACTOR'S EXPENSE. FILL SHALL BE BORROWED FROM A TDEC PERMITTED SITE. IF THE BORROW SITE IS FOR THIS PROJECT ONLY, IT MAY BE ADDED TO THE PROJECT SWPPP AT THE CONTRACTOR'S EXPENSE.

21. CATCH BASINS SHALL BE PRECAST BY BARGER AND SONS, FOLEY PRODUCTS COMPANY OR ENGINEER APPPROVED EQUAL. SIZE SHALL BE AS RECOMMENDED BY THE MANUFACTURER FOR THE PIPE SIZE, FRAME AND GRATE SIZE AND PIPE DEFLECTION ANGLE FOR EACH STRUCTURE UNLESS OTHERWISE SPECIFIED.

22. FRAME AND GRATES FOR CATCH BASINS SHALL BE JBS #4315, EJIW #V5630 OR ENGINEER APPROVED EQUAL. FRAME AND GRATES FOR JUNCTION BOX INSTALLATION SHALL BE JBS #1072 EJIW#V1600-3 OR ENGINEER APPROVED EQUAL. CATCH BASIN GRATES IN PAVED AREAS SHALL BE ADA COMPLIANT.

23. HDPE STORM SEWER PIPING SHALL BE SMOOTH INTERIOR, CORRUGATED EXTERIOR HDPE BY ADS, HANCOR OR ENGINEER APPROVED EQUAL.

24. ALL DOWN SPOUT AND INTERNAL ROOF DRAIN CONNECTIONS TO COLLECTION PIPING SHALL BE MADE WITH MECHANICAL CONNECTION EITHER TEE OR SADDLE.

25. UNDERGROUND DOWNSPOUT LEADERS AND COLLECTORS MAY BE PVC OR HDPE. ANY PIPE ABOVE GRADE SHALL BE PVC.

~~26. IF NOT SHOWN ON THE PLAN, COLLECTOR PIPING SHALL HAVE A MINIMUM SLOPE OF 1%.~~

27. DOWN SPOUT CONNECTION PIPE SHALL BE SIZED TO ACCEPT DOWN SPOUT OR DOWN SPOUT BOOT SIZE.

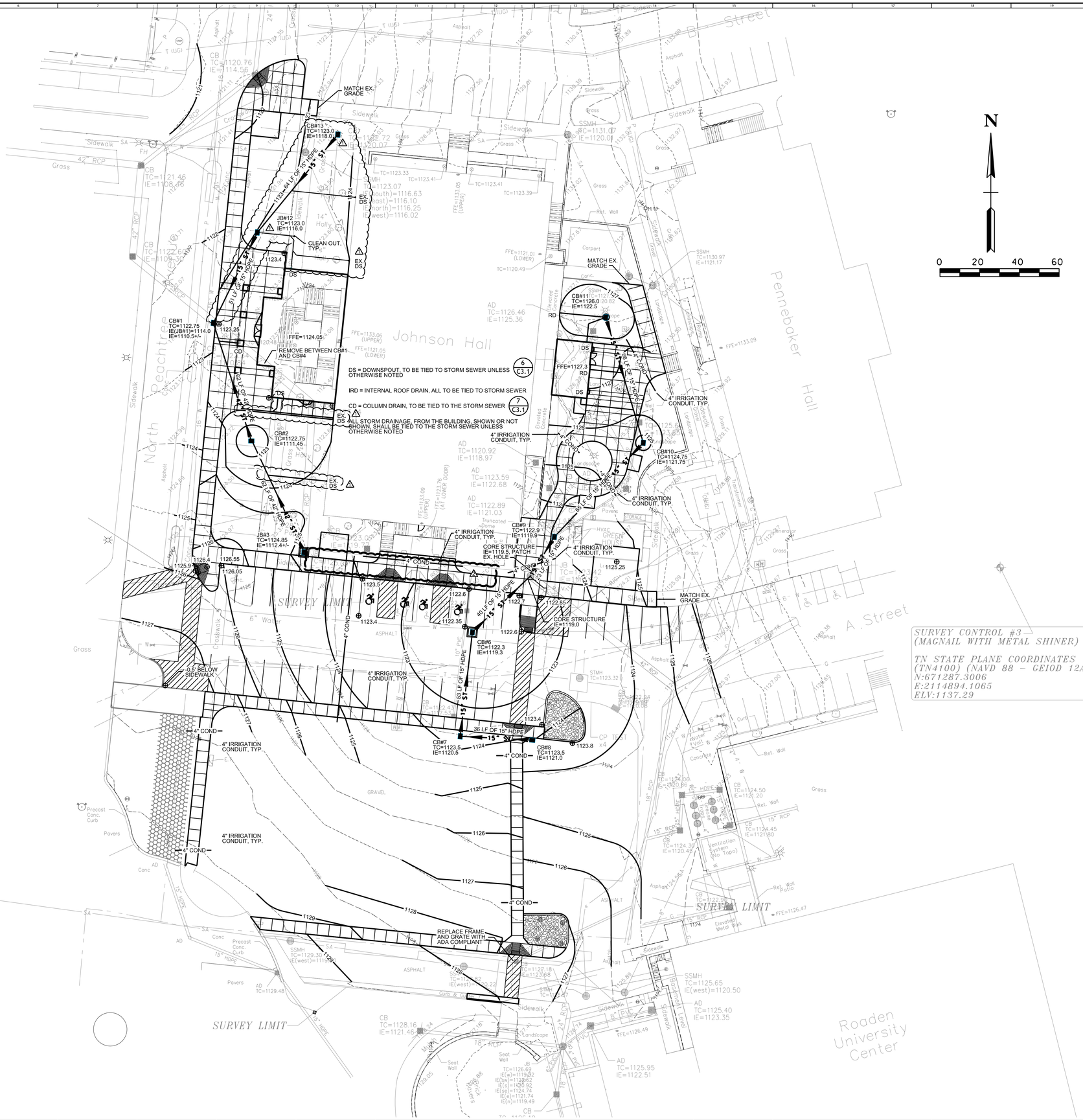

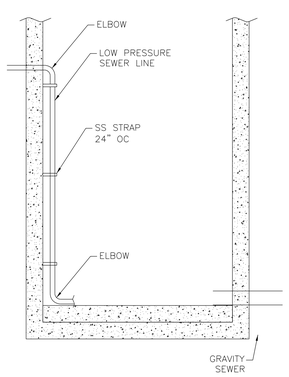

FM CONNECTION TO MANHOLE (1)

NOT TO SCALE

COMMUNITY TECTONICS ARCHITECTS
7810 Gleason Road, Knoxville, TN 37919
Ph. (865) 691-2680 www.communitytectonics.com

Upland Design Group
P.O. Box 1326, Crossville, TN 38557
Ph. (931) 484-7541 www.uplanddesigngroup.com

W&O Construction
150 Construction Drive, Livingston, TN 38570
Ph. (931) 403-1000 www.wocc.com

PROJECT
JOHNSON HALL RENOVATION - PKG 3
JOHNSON HALL RENOVATION & FOSTER DEMOLITION
SBC Nº 364/011-04-2022CM

OWNER: TENNESSEE TECH. UNIVERSITY
LOCATION: COOKEVILLE, TN

SEAL
DAVID SCOTT NICHOLS, REGISTERED ENGINEER, No. 105255, STATE OF TENNESSEE
3-28-25

NO.	DESCRIPTION	DATE
1	ADDED PATTERN FOR CONCRETE SIDEWALK ADA SLOPE	5-19-25
2	ADD TO C4.1 UPDTREAM	6-26-25

JOB NO.

ISSUE DATE: 3-28-25

SHEET TITLE: GRADING PLAN

DRAWN: DSN
REVIEW: DSN

C2.1

LIFE SAFETY SYMBOLS

- 0 — INDICATES OCCUPANT LOAD AT EXIT
- F — FIRE ALARM MANUAL PULL STATION - MOUNT 48" A.F.F.
- FEC — FIRE EXTINGUISHER CABINET
- FE — BRACKET MOUNTED FIRE EXTINGUISHER
- FIRE ALARM STROBE LIGHT - MOUNT 80" A.F.F., BUT NO CLOSER THAN 6" TO CEILING
- FIRE ALARM COMBINATION AUDIBLE/VISUAL UNIT - MOUNT 80" A.F.F., BUT NO CLOSER THAN 6" TO CEILING
- MH — MAGNETIC HOLD OPEN DEVICE CONNECTED TO FIRE ALARM CONTROL PANEL
- SD — SMOKE DETECTOR
- HD — HEAT RISE DETECTOR
- DD — DUCT DETECTOR
- SPRINKLER WALL WASH HEADS PER ICC-ES ESR-2397. APPLICABLE FOR FIRE BARRIERS AND EXTERIOR WALL FOR UP TO 2-HOUR FIRE RESISTANCE RATING (ICC-ES ESR-2397 3.1, 5.3). COORDINATE WITH FIRE PROTECTION DRAWINGS.
- "FACP" — FIRE ALARM CONTROL PANEL - PROVIDED WITH BATTERY BACKUP PER NFPA REQUIREMENTS
- "FAA" — FIRE ALARM ANNUCIATOR PANEL - PROVIDED WITH BATTERY BACKUP PER NFPA REQUIREMENTS.
- D1 — DOOR EXIT REQUIREMENT CALCULATIONS - SEE DOOR CAPACITY LEGEND
- EXIT SIGN - SINGLE OR DOUBLE FACE, WALL OR CLG. MOUNTED,AS INDICATED BY SYMBOL. DIRECTIONAL ARROWS SHALL BE PROVIDED AS SHOWN. EXIT SIGN SHALL BE ON THE LIFE-SAFETY CIRCUIT OF THE GENERATOR FOR OPERATION DURING LOSS OF NORMAL BUILDING POWER
- EXTERIOR EMERGENCY LIGHTING UNIT

ROOM NAME	OCCUPANCY (SEE TABLE FOR OCC FACTOR)	
XXX		XXX — ROOM NUMBER
XXX	XXX	XXX
AREA (SQ.FT.)		OCCUPANT LOAD

GENERAL NOTES:
- COORDINATE WITH ELECTRICAL DRAWINGS FOR LOCATIONS OF EMERGENCY LIGHTS, EXIT SIGNS, FIRE ALARM PULL STATIONS, STROBES, AND SMOKE DETECTORS.
- COORDINATE W/ UL SHEETS FOR RATED WALLS' DETAILS.
- COORDINATE W/ MECHANICAL DRAWINGS FOR DAMPERS AND THRU-WALL DETAILS.

DOOR CAPACITY LEGEND

DOOR CAPACITY BASED ON IBC 2012 TABLE 1005.1 AND NFPA TABLE 7.3.3.1 - WITH SPRINKLER SYSTEM

D1	SINGLE 36" DOOR 34" / EXIT 0.2" / PERSON 1 DOOR X 170 PERSONS = 170 PERSON EXIT CAPACITY	= 170 PERSONS / EXIT
D2	DOUBLE 36" DOOR 35" / EXIT 0.2" / PERSON 2 DOORS X 175 PERSONS = 350 PERSON EXIT CAPACITY	= 175 PERSONS / EXIT
D3	SINGLE 48" DOOR 46" / EXIT 0.2" / PERSON 1 DOOR X 230 PERSONS = 230 PERSON EXIT CAPACITY	= 230 PERSONS / EXIT
D4	DOUBLE 30" DOOR 29" / EXIT 0.2" / PERSON 2 DOORS X 145 PERSONS = 290 PERSON EXIT CAPACITY	= 145 PERSONS / EXIT
D5	SINGLE 42" DOOR 40" / EXIT 0.2" / PERSON 1 DOOR X 200 PERSONS = 200 PERSON EXIT CAPACITY	= 200 PERSONS / EXIT
D6	SINGLE 32" DOOR 30" / EXIT 0.2" / PERSON 1 DOOR X 150 PERSONS = 150 PERSON EXIT CAPACITY	= 150 PERSONS / EXIT
D7	DOUBLE 42" DOOR 41" / EXIT 0.2" / PERSON 2 DOORS X 205 PERSONS = 410 PERSON EXIT CAPACITY	= 205 PERSONS / EXIT

SHAFT WALLS GENERAL NOTES

IBC 713.2 - SHAFT ENCLOSURES SHALL BE CONSTRUCTED AS FIRE BARRIERS IN ACCORDANCE WITH SECTION 707 OR HORIZONTAL ASSEMBLIES IN ACCORDANCE WITH SECTION 711, OR BOTH.

IBC 713.4 - SHAFT ENCLOSURES SHALL HAVE A FIRE-RESISTANCE RATING OF NOT LESS THAN 2 HOURS WHERE CONNECTING FOUR STORIES OR MORE, AND NOT LESS THAN 1 HOUR WHERE CONNECTING LESS THAN FOUR STORIES. THE NUMBER OF STORIES CONNECTED BY THE SHAFT ENCLOSURE SHALL INCLUDE ANY BASEMENTS BUT NOT ANY MEZZANINES. SHAFT ENCLOSURES SHALL HAVE A FIRE-RESISTANCE RATING NOT LESS THAN THE FLOOR ASSEMBLY PENETRATED, BUT NEED NOT EXCEED 2 HOURS. SHAFT ENCLOSURES SHALL MEET THE REQUIREMENTS OF SECTION 703.2.1.

IBC 713.8 - PENETRATIONS IN A SHAFT ENCLOSURE SHALL BE PROTECTED IN ACCORDANCE WITH SECTION 714 AS REQUIRED FOR FIRE BARRIERS. STRUCTURAL ELEMENTS, SUCH AS BEAMS OR JOIST, WHERE PROTECTED IN ACCORDANCE WITH SECTION 714 SHALL BE PERMITTED TO PENETRATE A SHAFT ENCLOSURE.

IBC 713.10 - PENETRATIONS OF SHAFT ENCLOSURES BY DUCTS AND AIR TRANSFER OPENINGS SHALL COMPLY WITH SECTION 717.

IBC 713.11 - SHAFTS THAT DO NOT EXTEND TO THE BOTTOM OF THE BUILDING OR STRUCTURE - SHALL COMPLY WITH ONE OF THE FOLLOWING.
1. THEY NEED TO BE ENCLOSED AT THE LOWEST LEVEL WITH A FIRE-RESISTANT RATING AS THE LOWEST FLOOR BUT NOT LESS THAN THE SHAFT RATING.
2. THEY CAN TERMINATE AT A ROOM WITH A RELATED PURPOSE OF THE SHAFT, AND THAT ROOM SHALL BE SEPARATED FROM THE REST OF THE BUILDING BY A FIRE-RESISTANT RATING AT LEAST EQUAL TO THE SHAFT RATING.
3. THEY SHALL BE PROTECTED BY APPROVED FIRE DAMPERS INSTALLED AT THE LOWEST FLOOR LEVEL.

IBC 713.12 - SHAFTS THAT DO NOT EXTEND TO THE UNDERSIDE OF ROOF SHEATHING, DECK OR SLAB OF THE BUILDING SHALL BE ENCLOSED AT THE TOP WITH CONSTRUCTION OF THE SAME FIRE-RESISTANCE RATING AS THE TOPMOST FLOOR PENETRATED BY THE SHALL, BUT NOT LESS THAN THE FIRE-RESISTANCE RATING REQUIRED FOR THE SHAFT ENCLOSURE.

SHAFT TYPE	NUMBER OF FLOORS CONNECTED	REQUIRED RATING
SH-A	2	1 HOUR
SH-B	4	2 HOUR

RATED WALL SYMBOL LEGEND

1-HOUR FIRE BARRIER

FLOOR TO UNDERSIDE OF DECK ABOVE AT CONC. BLOCK LOCATIONS (SEE FLOOR PLANS) USE UL DESIGN U905 (NONBEARING) AND UL DESIGN U905 (LOAD BEARING), TERMINATE AT METAL DECK WITH UL SYSTEMS HW-D-0022 (WALL PERPENDICULAR TO DECK) OR HW-D-0030 (WALL PARALLEL TO DECK FLUTES)

AT GYPSUM BOARD WALL LOCATIONS (SEE FLOOR PLANS) USE UL DESIGN U419 WITH; TERMINATE AT METAL DECK WITH UL SYSTEM HW-D-0024 (WALL PERPENDICULAR TO DECK FLUTES) OR HW-D-0029 (WALL PARALLEL TO DECK FLUTES)

2-HOUR FIRE BARRIER

FLOOR TO UNDERSIDE OF DECK ABOVE AT CONC. BLOCK LOCATIONS (SEE FLOOR PLANS) USE UL DESIGN U905 (NONBEARING) AND UL DESIGN U905 (LOAD BEARING), TERMINATE AT METAL DECK WITH UL SYSTEMS HW-D-0022 (WALL PERPENDICULAR TO DECK FLUTES) OR HW-D-0030 (WALL PARALLEL TO DECK FLUTES)

AT GYPSUM BOARD WALL LOCATIONS (SEE FLOOR PLANS) USE UL DESIGN U419 WITH; TERMINATE AT METAL DECK WITH UL SYSTEM HW-D-0024 (WALL PERPENDICULAR TO DECK FLUTES) OR HW-D-0029 (WALL PARALLEL TO DECK FLUTES)

SHAFT WALL - PER IBC 2012-SECTION 713.2
USE UL DESIGN U415, TERMINATE AT METAL DECK WITH UL SYSTEMS HW-D-0549 (FLOOR OR ROOF DECK WITH FLUTES) OR HW-D-0480 (FLOOR OR ROOF DECK WITHOUT FLUTES)

SMOKE PARTITION PER IBC 2012 SECTION 710 AND NFPA 8.3.4.2, WALL SHALL EXTEND TO DECK.

NOTES:
ALL INTERIOR WALLS SHALL EXTEND TO DECK ABOVE UNLESS NOTED OTHERWISE.

PROVIDE 3" HIGH, BRIGHT RED STENCILED LETTERS VISIBLE ABOVE CEILING AT ALL CHANGES IN DIRECTION AND AT 30' INTERVALS ALONG ALL RATED WALLS READING: " ___ HOUR FIRE AND SMOKE BARRIER - PROTECT ALL OPENINGS." (INCORPORATE CORRECT WALL DESIGNATIONS) FIRE WALLS SHALL BE STENCILED ON BOTH SIDES OF WALLS.

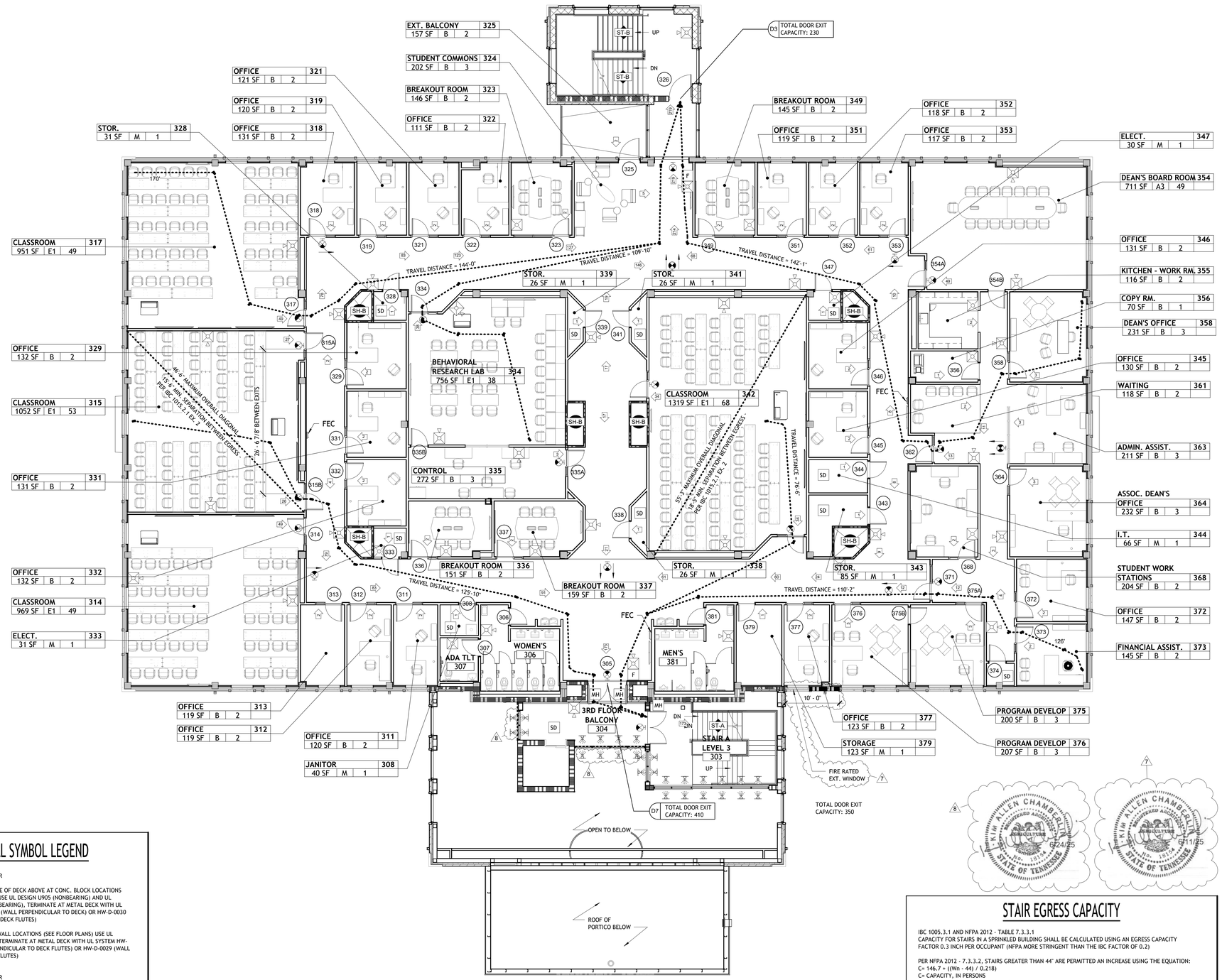

LIFE SAFETY PLAN - THIRD FLOOR

1/8" = 1'-0" 0 1' 2' 4' 8'

PLAN NORTH TRUE NORTH

FLOOR AREA PER OCCUPANT

IBC 2012 EDITION TABLE 1004.1.2 - MAXIMUM FLOOR AREA ALLOWANCES PER OCCUPANT

A1	ASSEMBLY USE - CONCENTRATED (CHAIRS ONLY - NOT FIXED) - 7 S.F. NET/ PERSON
A2	ASSEMBLY USE - STANDING SPACE - 5 S.F. NET / PERSON
A3	ASSEMBLY UNCONCENTRATED (TABLES AND CHAIRS) - 15 NET / PERSON
B	BUSINESS USE - 100 S.F. GROSS / PERSON
M	MECHANICAL / STORAGE USE - 300 S.F. GROSS / PERSON
E1	EDUCATIONAL - CLASSROOM AREAS - 20 S.F. NET / PERSON
E2	EDUCATIONAL - SHOPS AND VOCATIONAL USE - 50 S.F. NET / PERSON

ATRIUM TRAVEL DISTANCE

IBC 2012 EDITION 404.9 - IN OTHER THAN THE LOWEST LEVEL OF THE ATRIUM. THE PORTION OF EXIT ACCESS TRAVEL DISTANCE WITHIN THE ATRIUM SPACE SHALL BE NOT GREATER THAN 200 FEET.

STAIR EGRESS CAPACITY

IBC 1005.3.1 AND NFPA 2012 - TABLE 7.3.3.1
CAPACITY FOR STAIRS IN A SPRINKLED BUILDING SHALL BE CALCULATED USING AN EGRESS CAPACITY FACTOR 0.3 INCH PER OCCUPANT (NFPA MORE STRINGENT THAN THE IBC FACTOR OF 0.2)

PER NFPA 2012 - 7.3.3.2, STAIRS GREATER THAN 44" ARE PERMITTED AN INCREASE USING THE EQUATION:
C= 146.7 + ((Wn - 44) / 0.218)
C= CAPACITY, IN PERSONS
Wn= NOMINAL WIDTH OF THE STAIR

STAIR TYPE	WIDTH OF STAIR FOR EGRESS CALCULATION	CAPACITY FACTOR	OCCUPANT CAPACITY
ST-A	5'-4"	146.7 + ((64 - 44) / 0.218	239 OCCUPANTS
ST-B	6'-8"	146.7 + ((80 - 44) / 0.218	312 OCCUPANTS
ST-C	5'-0.75"	146.7 + ((60.75 - 44) / 0.218	224 OCCUPANTS
ST-D	3'-6"	0.3	140 OCCUPANTS
ST-E	6'-0"	146.7 + ((72 - 44) / 0.218	275 OCCUPANTS
ST-F	3'-4"	0.3	134 OCCUPANTS
ST-G	9'-0"	146.7 + ((108 - 44) / 0.218	441 OCCUPANTS
ST-H	13'-5"	146.7 + ((161 - 44) / 0.218	684 OCCUPANTS

IBC 1005.3.1 AND NFPA 2012 - 7.3.1.4 - EXITS SERVING MORE THAN ONE STORY-
WHERE AN EXIT SERVES MORE THAN ONE STORY, ONLY THE OCCUPANT LOAD OF EACH STORY CONSIDERED INDIVIDUALLY SHALL BE USED IN COMPUTING THE REQUIRED CAPACITY OF THE EXIT AT THAT STORY.

IBC 1009.3 EXCEPTION 5 - EXIT ACCESS STAIRWAYS WITHIN AN ATRIUM COMPLYING WITH THE PROVISIONS OF SECTION 404 ARE NOT REQUIRED TO BE ENCLOSED.

COMMUNITY TECTONICS ARCHITECTS
7610 Gleason Road Knoxville, TN 37919
Ph. (865) 637-0890 www.communitytectonics.com

Upland Design Group
P.O. Box 1328 Crossville, TN 38557
Ph. (931) 484-7541 www.uplanddesigngroup.com

W&O Construction
150 Construction Drive Livingston, TN 38570
Ph. (931) 403-1000 www.wocc.com

PROJECT
JOHNSON HALL RENOVATION - PKG 3
JOHNSON HALL RENOVATION & FOSTER DEMOLITION
SBC Nº 364/011-04-2022CM

OWNER: TENNESSEE TECH. UNIVERSITY
LOCATION: COOKEVILLE, TN

SEAL

NO.	DESCRIPTION	DATE
7	Addendum 3 - PKG 3	6-11-25
8	Addendum 5 - PKG 3	6-24-25

JOB NO. 22025

ISSUE DATE 3-28-25

SHEET TITLE
LIFE SAFETY PLAN - 3RD FLOOR

DRAWN CWD

REVIEW KAC

LS2.3

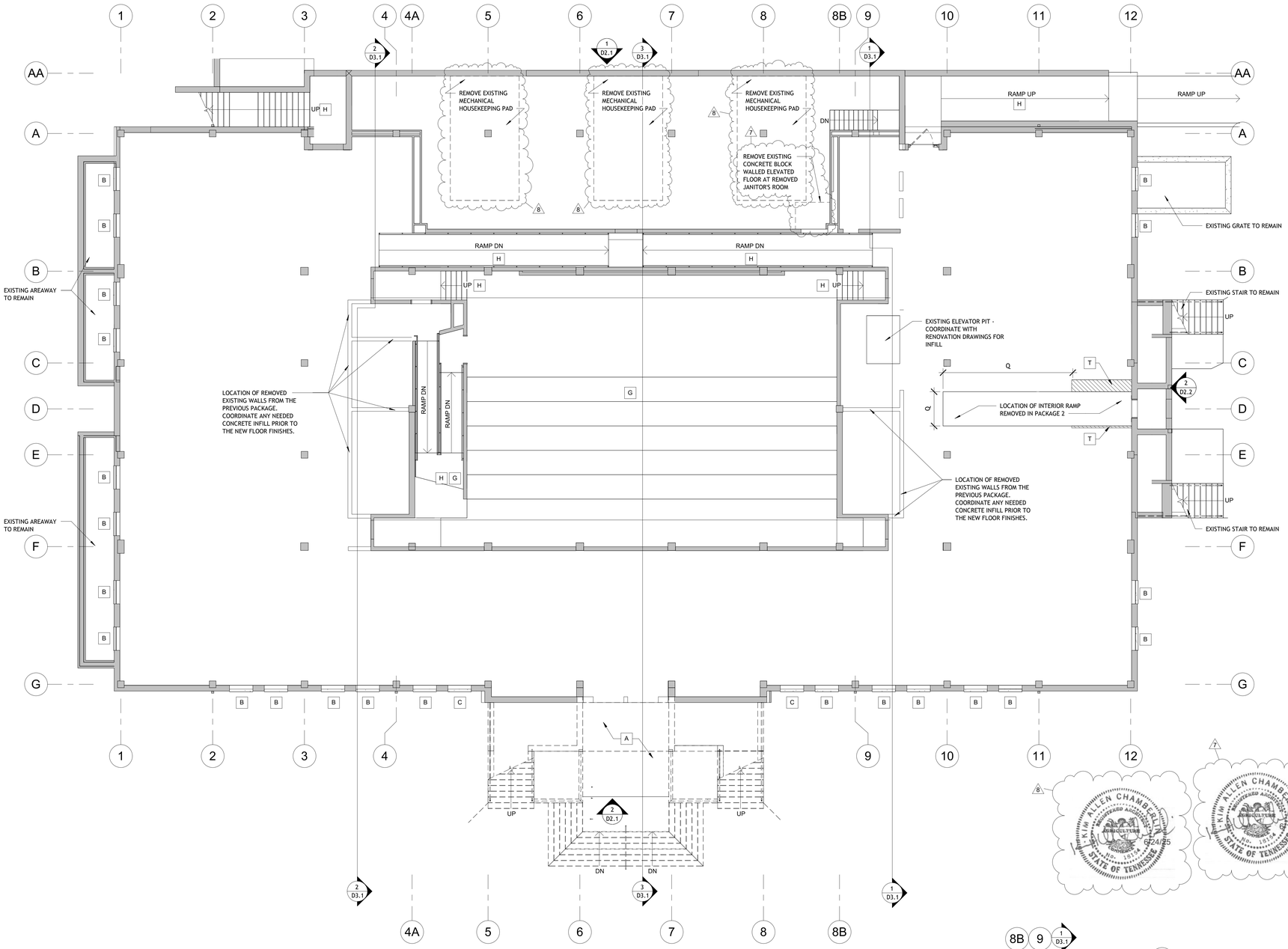

FIRST FLOOR DEMOLITION PLAN

1/8" = 1'-0"

PLAN NORTH TRUE NORTH

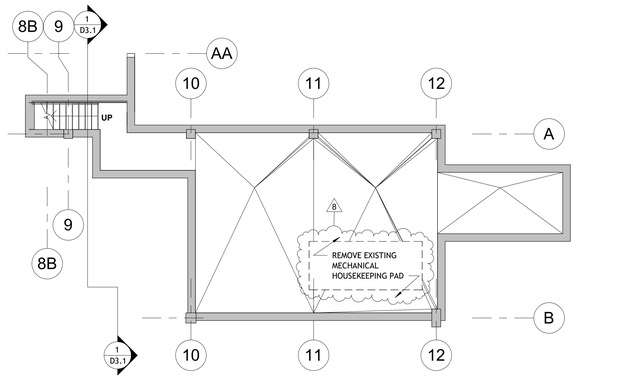

CHILLER ROOM DEMOLITION PLAN

1/8" = 1'-0"

DEMOLITION KEY NOTES - PLANS - PACKAGE 3

KEYNOTES SHOWN ARE NOT PARTICULAR TO THIS FLOOR PLAN. REFER TO DEMOLITION PLAN FOR SCOPE ITEMS.

A. REMOVE & DISPOSE EXISTING CONCRETE STEPS & RELATED STRUCTURE IN THEIR ENTIRETY. DISPOSE OF RELATED PLANTERS, STOOPS, HANDRAILS / GUARDRAILS, PLANTERS, RELATED LANDSCAPING, & EXTERIOR LIGHT FIXTURES, SITE FURNISHINGS, AND ELECTRICAL ICE MELTING SYSTEM. CONTACT OWNER'S REP ABOUT REUSE OF ANY ITEMS. IF OWNER DOES NOT WANT EXISTING ITEMS, CONTRACTOR TO DISPOSE OF PROPERLY.

B. EXISTING METAL FRAMED WINDOW & ASSOCIATED GLAZING, HARDWARE, SEALANT AND RELATED JAMB TRIM REMOVED IN PACKAGE 2. PREP ROUGH OPENING FOR NEW WINDOW. COORDINATE WITH PROPOSED WORK AND EXISTING CONDITIONS.

C. EXISTING WINDOW, WINDOW FRAME, GLAZING, WINDOW TRIMS, HARDWARE, PRE-CAST STONE HEADS, SILLS, JAMBS, AND WINDOW PANELING REMOVED IN PACKAGE 2. PREP ROUGH OPENING TO RECEIVE NEW WINDOWS. COORDINATE WITH PROPOSED WORK AND EXISTING CONDITIONS.

D. REMOVE EXISTING PILASTER(S) AND ANY FRAMING AND BLOCKING BEHIND THEM.

E. REMOVE EXISTING EXTERIOR LIGHT FIXTURES. COORDINATE DISPOSAL WITH OWNER'S REPRESENTATIVE FOR RE-USE.

F. DEMO PORTION OF EXISTING WALL TO ALLOW FOR NEW OPENING. PROVIDE TEMPORARY SUPPORT UNTIL NEW HEADER CAN BE INSTALLED. COORDINATE WITH STRUCTURAL DRAWINGS FOR HEADER SUPPORTS.

G. EXISTING TIERED CONCRETE SUBFLOOR, RAMP, RISERS, AND STAIRS TO REMAIN.

H. EXISTING STAIR / RAMP AND ASSOCIATED HANDRAILS TO REMAIN.

I. EXISTING PRECAST STONE WINDOW TRIM TO REMAIN AT JAMB, AND HEAD OF EXISTING WINDOWS. SELECT DEMOLITION IN PACKAGE 2 OF WINDOW PANEL TO ALLOW FOR NEW DOOR. COORDINATE WITH PROPOSED DRAWINGS. PREP ROUGH OPENING TO RECEIVE NEW DOOR FRAME PER RENOVATION DETAILS.

J. EXISTING TIERED FLOOR AND STAIRS TO REMAIN. COORDINATE WITH ELECTRICAL AND RENOVATION DRAWINGS. PROTECT AS REQUIRED DURING ADJACENT DEMOLITION AND CONSTRUCTION.

K. REMOVE EXISTING GABLE END & HIPPED ROOF AND ALL ASSOCIATED CORNICE(S) AND ARCHED ENTRY PEDIMENT, ROOF STRUCTURE, AND ROOF GUTTERS BACK TO MAIN BRANCH.

L. REMOVE EXISTING DORMER AND DORMER WINDOW IN IT'S ENTIRETY. PROVIDE TEMPORARY ENCLOSURE UNTIL ROOF CAN BE PATCHED. COORDINATE WITH NEW WORK DRAWINGS.

M. EXISTING ROOF, ROOF DOWNSPOUTS, ROOF DRAINS, GUTTERS, AND ROOF MOUNTED EQUIPMENT TO REMAIN; PROTECT AND PRESERVE FOR THE DURATION OF CONSTRUCTION.

N. EXISTING ATTIC MEZZANINE TO REMAIN. COORDINATE WITH MECHANICAL, PLUMBING, AND ELECTRICAL FOR DEMOLITION OF MECHANICAL AND ELECTRICAL EQUIPMENT ON THAT MEZZANINE.

O. EXISTING ROOF, SHEATHING, UNDERLAYMENT AND RELATED FLASHING TO BE REMOVED. REMOVE ROOF JOISTS SHOWN DASHED IN PREPARATION FOR NEW PROGRAM SPACE ON FOURTH FLOOR. COORDINATE WITH STRUCTURAL.

P. <NOT USED>

Q. PREP FLOOR ADJACENT TO INTERIOR RAMP REMOVED IN PACKAGE 2. COORDINATE WITH RENOVATION DRAWINGS AND STRUCTURAL FOR SLAB TRANSITION DETAILS.

R. REMOVE TOP TIER RISER . COORDINATE WITH RENOVATION DRAWINGS FOR NEW FLOOR AND FINISHES. FIELD VERIFY DIMENSIONS AND CONSTRUCTION.

S. REMOVE EXISTING DOOR AND FRAME, PREP OPENING TO RECEIVE NEW DOOR AND FRAME. PROVIDE TEMPORARY SUPPORT UNTIL NEW HEADER CAN BE INSTALLED.

T. REMOVE PORTION OF EXISTING CONCRETE SLAB AS REQUIRED TO PORT NEW CONCRETE WALL PORTION SUPPORTING NEW SPRINKLER RISER ROOM FLOOR. COORDINATE WITH STRUCTURAL AND RENOVATION DRAWINGS.

U. REMOVE EXISTING RAILING SYSTEM. PREP EXISTING STAIRS TO RECEIVE GUARDRAIL REUSING EXISTING POST HOLES. ENLARGE HOLES AS REQUIRED.

DEMOLITION GENERAL NOTES - PACKAGE 3

1. FIELD VERIFY EXISTING CONDITIONS, MEASUREMENTS, AND LAYOUTS. CONTACT ARCHITECT IMMEDIATELY IF ANY DISCREPANCIES ARE FOUND.
2. COORDINATE DEMOLITION WORK WITH EXTENT OF NEW RENOVATION WORK ON ARCHITECTURAL, FIRE PROTECTION, MECHANICAL, PLUMBING AND ELECTRICAL SHEETS. FIELD VERIFY ABOVE CEILING CONNECTIONS AND COORDINATE WITH NEW HEIGHT AND PLACEMENT OF CEILING GRID, NEW AND EXISTING LIGHT LOCATIONS AND SPRINKLER PIPING. CONTRACTOR TO PROVIDE NEW FINISH TO AREAS TO REMAIN EXPOSED, DAMAGED BY CEILING WORK, ELECTRICAL, MECHANICAL, PLUMBING AND SPRINKLER INSTALLATION AND OTHER WORK ASSOCIATED WITH THE PROJECT.
3. COORDINATE WITH PACKAGE 2 FOR DEMOLITION AND ABATEMENT.
4. MAINTAIN EXISTING ROOF WARRANTIES OF PORTIONS OF ROOF TO REMAIN WHEN DEMOLISHING ADJACENT PORTIONS ASSOCIATED WITH THE NEW ADDITIONS.
5. COORDINATE WITH CIVIL DRAWINGS FOR MORE INFORMATION ON DEMOLITION AND REWORK OF EXISTING GRADING, SIDEWALKS, PARKING, ROADS AND SITE UTILITIES.
6. COORDINATE WITH STRUCTURAL, MECHANICAL, PLUMBING, FIRE PROTECTION, AND ELECTRICAL FOR ADDITIONAL DEMOLITION NOTES AND REQUIREMENTS.

DEMOLITION WALL LEGEND

VARIES — EXISTING WALLS TO REMAIN. FIELD VERIFY EXISTING CONDITION, THICKNESS AND MATERIAL. PROTECT FROM DEMOLITION WORK. COORDINATE WITH ABATEMENT SPECIFICATIONS FOR ANY DEMOLITION OR REMEDIATION OF FINISHES ON EXISTING WALL TO REMAIN.

VARIES — REMOVE EXISTING WALL. FIELD VERIFY EXISTING CONDITION, THICKNESS AND MATERIAL. PROVIDE CLEAN STRAIGHT EDGE AT INTERSECTION OF WALLS AND FLOOR SLABS TO REMAIN. PROTECT EXISTING FLOORS AND WALLS TO REMAIN FROM DEMOLITION WORK.

REMOVE EXISTING DOOR. TURN ANY REMAINING EXISTING HARDWARE OVER TO OWNER. COORDINATE ANY DOORS NOT REUSED TO BE TURNED OVER TO OWNER. IF THE OWNER DOES NOT WANT HARDWARE, DOORS, AND/OR FRAMES, CONTRACTOR TO DISPOSE OF DOORS AND FRAMES.

EXISTING DOOR TO REMAIN. FIELD VERIFY SIZE AND LOCATIONS. VERIFY IN FIELD GOOD WORKING ORDER. IF EXISTING DOOR IS NOT IN GOOD WORKING ORDER, COORDINATE WITH DESIGNER IMMEDIATELY.

COMMUNITY TECTONICS ARCHITECTS
7610 Gleason Road Knoxville, TN 37919
Ph. (865) 637-0890 www.communitytectonics.com

Upland Design Group
P.O. Box 11026 Cleveland, TN 38557
Ph. (931) 484-7541 www.uplanddesigngroup.com

W&O Construction
150 Construction Drive Livingston, TN 38570
Ph. (931) 403-1000 www.wocc.com

PROJECT
JOHNSON HALL RENOVATION - PKG 3
JOHNSON HALL RENOVATION & FOSTER DEMOLITION
SBC Nº 364/011-04-2022CM

OWNER: TENNESSEE TECH. UNIVERSITY
LOCATION: COOKEVILLE, TN

SEAL

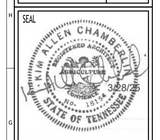

NO.	DESCRIPTION	DATE
4	Addendum 1 - PKG 3	5-16-25
7	Addendum 3 - PKG 3	6-11-25
8	Addendum 5 - PKG 3	6-24-25

JOB NO. 22025

ISSUE DATE 3-28-25

SHEET TITLE
DEMOLITION PLAN - FIRST FLOOR - PKG 3

DRAWN CWD

REVIEW KAC

D1.1

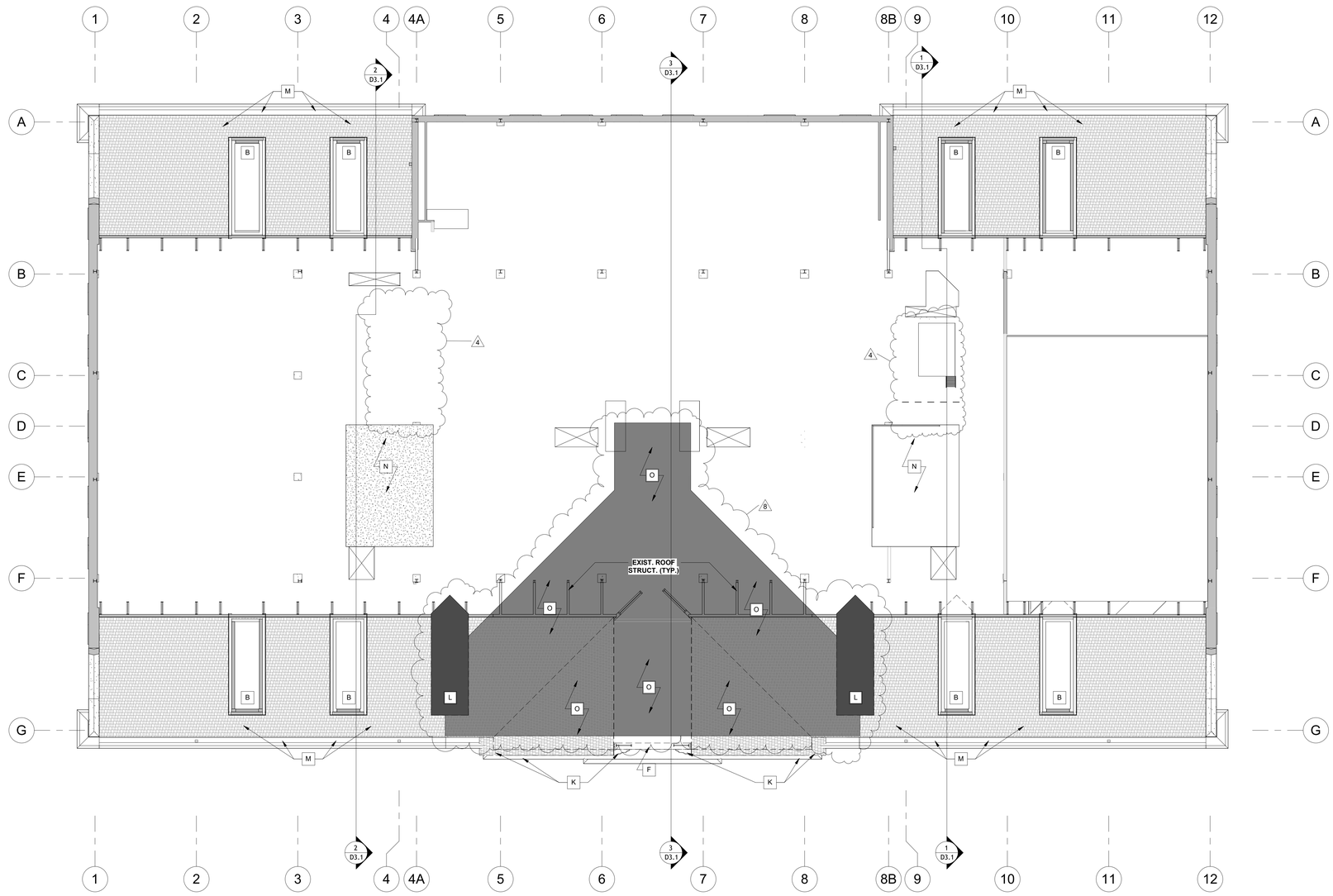

ATTIC DEMOLITION PLAN

1/8" = 1'-0"

0 1' 2' 4' 8'

PLAN NORTH TRUE NORTH

ADDED HATCH AREA SHOWING THE EXTENT OF KEY NOTES "L" AND "O".

DEMOLITION KEY NOTES - PLANS - PACKAGE 3

KEYNOTES SHOWN ARE NOT PARTICULAR TO THIS FLOOR PLAN. REFER TO DEMOLITION PLAN FOR SCOPE ITEMS.

A. REMOVE & DISPOSE EXISTING CONCRETE STEPS & RELATED STRUCTURE IN THEIR ENTIRETY. DISPOSE OF RELATED PLANTERS, STOOPS, HANDRAILS / GUARDRAILS, PLANTERS, RELATED LANDSCAPING, & EXTERIOR LIGHT FIXTURES, SITE FURNISHINGS, AND ELECTRICAL ICE MELTING SYSTEM. CONTACT OWNER'S REP ABOUT REUSE OF ANY ITEMS. IF OWNER DOES NOT WANT EXISTING ITEMS, CONTRACTOR TO DISPOSE OF PROPERLY.

B. EXISTING METAL FRAMED WINDOW & ASSOCIATED GLAZING, HARDWARE, SEALANT AND RELATED JAMB TRIM REMOVED IN PACKAGE 2. PREP ROUGH OPENING FOR NEW WINDOW. COORDINATE WITH PROPOSED WORK AND EXISTING CONDITIONS.

C. EXISTING WINDOW, WINDOW FRAME, GLAZING, WINDOW TRIMS, HARDWARE, PRE-CAST STONE HEADS, SILLS, JAMBS, AND WINDOW PANELING REMOVED IN PACKAGE 2. PREP ROUGH OPENING TO RECEIVE NEW WINDOWS. COORDINATE WITH PROPOSED WORK AND EXISTING CONDITIONS.

D. REMOVE EXISTING PILASTER(S) AND ANY FRAMING AND BLOCKING BEHIND THEM.

E. REMOVE EXISTING EXTERIOR LIGHT FIXTURES. COORDINATE DISPOSAL WITH OWNER'S REPRESENTATIVE FOR RE-USE.

F. DEMO PORTION OF EXISTING WALL TO ALLOW FOR NEW OPENING. PROVIDE TEMPORARY SUPPORT UNTIL NEW HEADER CAN BE INSTALLED. COORDINATE WITH STRUCTURAL DRAWINGS FOR HEADER SUPPORTS.

G. EXISTING TIERED CONCRETE SUBFLOOR, RAMP, RISERS, AND STAIRS TO REMAIN.

H. EXISTING STAIR / RAMP AND ASSOCIATED HANDRAILS TO REMAIN.

I. EXISTING PRECAST STONE WINDOW TRIM TO REMAIN AT JAMB, AND HEAD OF EXISTING WINDOWS. SELECT DEMOLITION IN PACKAGE 2 OF WINDOW PANEL TO ALLOW FOR NEW DOOR. COORDINATE WITH PROPOSED DRAWINGS. PREP ROUGH OPENING TO RECEIVE NEW DOOR FRAME PER RENOVATION DETAILS.

J. EXISTING TIERED FLOOR AND STAIRS TO REMAIN. COORDINATE WITH ELECTRICAL AND RENOVATION DRAWINGS. PROTECT AS REQUIRED DURING ADJACENT DEMOLITION AND CONSTRUCTION.

K. REMOVE EXISTING GABLE END & HIPPED ROOF AND ALL ASSOCIATED CORNICE(S) AND ARCHED ENTRY PEDIMENT, ROOF STRUCTURE, AND ROOF GUTTERS BACK TO MAIN BRANCH.

L. REMOVE EXISTING DORMER AND DORMER WINDOW IN IT'S ENTIRETY. PROVIDE TEMPORARY ENCLOSURE UNTIL ROOF CAN BE PATCHED. COORDINATE WITH NEW WORK DRAWINGS.

M. EXISTING ROOF, ROOF DOWNSPOUTS, ROOF DRAINS, GUTTERS, AND ROOF MOUNTED EQUIPMENT TO REMAIN; PROTECT AND PRESERVE FOR THE DURATION OF CONSTRUCTION.

N. EXISTING ATTIC MEZZANINE TO REMAIN. COORDINATE WITH MECHANICAL, PLUMBING, AND ELECTRICAL FOR DEMOLITION OF MECHANICAL AND ELECTRICAL EQUIPMENT ON THAT MEZZANINE.

O. EXISTING ROOF, SHEATHING, UNDERLAYMENT AND RELATED FLASHING TO BE REMOVED. REMOVE ROOF JOISTS SHOWN DASHED IN PREPARATION FOR NEW PROGRAM SPACE ON FOURTH FLOOR. COORDINATE WITH STRUCTURAL.

P. <NOT USED>

Q. PREP FLOOR ADJACENT TO INTERIOR RAMP REMOVED IN PACKAGE 2. COORDINATE WITH RENOVATION DRAWINGS AND STRUCTURAL FOR SLAB TRANSITION DETAILS.

R. REMOVE TOP TIER RISER . COORDINATE WITH RENOVATION DRAWINGS FOR NEW FLOOR AND FINISHES. FIELD VERIFY DIMENSIONS AND CONSTRUCTION.

S. REMOVE EXISTING DOOR AND FRAME, PREP OPENING TO RECEIVE NEW DOOR AND FRAME. PROVIDE TEMPORARY SUPPORT UNTIL NEW HEADER CAN BE INSTALLED.

T. REMOVE PORTION OF EXISTING CONCRETE SLAB AS REQUIRED TO PORT NEW CONCRETE WALL PORTION SUPPORTING NEW SPRINKLER RISER ROOM FLOOR. COORDINATE WITH STRUCTURAL AND RENOVATION DRAWINGS.

U. REMOVE EXISTING RAILING SYSTEM. PREP EXISTING STAIRS TO RECEIVE GUARDRAIL REUSING EXISTING POST HOLES. ENLARGE HOLES AS REQUIRED.

DEMOLITION GENERAL NOTES - PACKAGE 3

1. FIELD VERIFY EXISTING CONDITIONS, MEASUREMENTS, AND LAYOUTS. CONTACT ARCHITECT IMMEDIATELY IF ANY DISCREPANCIES ARE FOUND.
2. COORDINATE DEMOLITION WORK WITH EXTENT OF NEW RENOVATION WORK ON ARCHITECTURAL, FIRE PROTECTION, MECHANICAL, PLUMBING AND ELECTRICAL SHEETS. FIELD VERIFY ABOVE CEILING CONNECTIONS AND COORDINATE WITH NEW HEIGHT AND PLACEMENT OF CEILING GRID, NEW AND EXISTING LIGHT LOCATIONS AND SPRINKLER PIPING. CONTRACTOR TO PROVIDE NEW FINISH TO AREAS TO REMAIN EXPOSED, DAMAGED BY CEILING WORK, ELECTRICAL, MECHANICAL, PLUMBING AND SPRINKLER INSTALLATION AND OTHER WORK ASSOCIATED WITH THE PROJECT.
3. COORDINATE WITH PACKAGE 2 FOR DEMOLITION AND ABATEMENT.
4. MAINTAIN EXISTING ROOF WARRANTIES OF PORTIONS OF ROOF TO REMAIN WHEN DEMOLISHING ADJACENT PORTIONS ASSOCIATED WITH THE NEW ADDITIONS.
5. COORDINATE WITH CIVIL DRAWINGS FOR MORE INFORMATION ON DEMOLITION AND REWORK OF EXISTING GRADING, SIDEWALKS, PARKING, ROADS AND SITE UTILITIES.
6. COORDINATE WITH STRUCTURAL, MECHANICAL, PLUMBING, FIRE PROTECTION, AND ELECTRICAL FOR ADDITIONAL DEMOLITION NOTES AND REQUIREMENTS.

4 — KIM ALLEN CHAMBERLIN, REGISTERED ARCHITECT, AGRICULTURE, 5/16/25, STATE OF TENNESSEE

8 — KIM ALLEN CHAMBERLIN, REGISTERED ARCHITECT, AGRICULTURE, 6/24/25, STATE OF TENNESSEE

DEMOLITION WALL LEGEND

VARIES — EXISTING WALLS TO REMAIN. FIELD VERIFY EXISTING CONDITION, THICKNESS AND MATERIAL. PROTECT FROM DEMOLITION WORK. COORDINATE WITH ABATEMENT SPECIFICATIONS FOR ANY DEMOLITION OR REMEDIATION OF FINISHES ON EXISTING WALL TO REMAIN.

VARIES — REMOVE EXISTING WALL. FIELD VERIFY EXISTING CONDITION, THICKNESS AND MATERIAL. PROVIDE CLEAN STRAIGHT EDGE AT INTERSECTION OF WALLS AND FLOOR SLABS TO REMAIN. PROTECT EXISTING FLOORS AND WALLS TO REMAIN FROM DEMOLITION WORK.

REMOVE EXISTING DOOR. TURN ANY REMAINING EXISTING HARDWARE OVER TO OWNER. COORDINATE ANY DOORS NOT REUSED TO BE TURNED OVER TO OWNER. IF THE OWNER DOES NOT WANT HARDWARE, DOORS, AND/OR FRAMES, CONTRACTOR TO DISPOSE OF DOORS AND FRAMES.

EXISTING DOOR TO REMAIN. FIELD VERIFY SIZE AND LOCATIONS. VERIFY IN FIELD GOOD WORKING ORDER. IF EXISTING DOOR IS NOT IN GOOD WORKING ORDER, COORDINATE WITH DESIGNER IMMEDIATELY.

COMMUNITY TECTONICS ARCHITECTS
7610 Gleason Road, Knoxville, TN 37919
Ph. (865) 637-0890, www.communitytectonics.com

Upland Design Group
P.O. Box 1326, Crossville, TN 38557
Ph. (931) 484-7541, www.uplanddesigngroup.com

W&O Construction
150 Construction Drive, Livingston, TN 38570
Ph. (931) 403-1000, www.wocc.com

PROJECT
JOHNSON HALL RENOVATION - PKG 3
JOHNSON HALL RENOVATION & FOSTER DEMOLITION
SBC Nº 364/011-04-2022CM

OWNER: TENNESSEE TECH. UNIVERSITY
LOCATION: COOKEVILLE, TN

SEAL: KIM ALLEN CHAMBERLIN, REGISTERED ARCHITECT, AGRICULTURE, 3/28/25, STATE OF TENNESSEE

NO.	DESCRIPTION	DATE
4	Addendum 1 - PKG 3	5-16-25
8	Addendum 5 - PKG 3	6-24-25

JOB NO. 22025

ISSUE DATE 3-28-25

SHEET TITLE: DEMOLITION PLAN - ATTIC

DRAWN: CWD

REVIEW: KAC

D1.5

RATED WALL SYMBOL LEGEND

1-HOUR FIRE BARRIER

FLOOR TO UNDERSIDE OF DECK ABOVE AT CONC. BLOCK LOCATIONS (SEE FLOOR PLANS) USE UL DESIGN U905 (NONBEARING) AND UL DESIGN U905 (LOAD BEARING), TERMINATE AT METAL DECK WITH UL SYSTEMS HW-D-0022 (WALL PERPENDICULAR TO DECK) OR HW-D-0030 (WALL PARALLEL TO DECK FLUTES)

AT GYPSUM BOARD WALL LOCATIONS (SEE FLOOR PLANS) USE UL DESIGN U419 WITH; TERMINATE AT METAL DECK WITH UL SYSTEM HW-D-0024 (WALL PERPENDICULAR TO DECK FLUTES) OR HW-D-0029 (WALL PARALLEL TO DECK FLUTES)

2-HOUR FIRE BARRIER

FLOOR TO UNDERSIDE OF DECK ABOVE AT CONC. BLOCK LOCATIONS (SEE FLOOR PLANS) USE UL DESIGN U905 (NONBEARING) AND UL DESIGN U905 (LOAD BEARING), TERMINATE AT METAL DECK WITH UL SYSTEMS HW-D-0022 (WALL PERPENDICULAR TO DECK FLUTES) OR HW-D-0030 (WALL PARALLEL TO DECK FLUTES)

AT GYPSUM BOARD WALL LOCATIONS (SEE FLOOR PLANS) USE UL DESIGN U419 WITH; TERMINATE AT METAL DECK WITH UL SYSTEM HW-D-0024 (WALL PERPENDICULAR TO DECK FLUTES) OR HW-D-0029 (WALL PARALLEL TO DECK FLUTES)

SHAFT WALL - PER IBC 2012 SECTION 713.2
USE UL DESIGN U415, TERMINATE AT METAL DECK WITH UL SYSTEMS HW-D-0549 (FLOOR OR ROOF DECK WITH FLUTES) OR HW-D-0480 (FLOOR OR ROOF DECK WITHOUT FLUTES)

SMOKE PARTITION PER IBC 2012 SECTION 710 AND NFPA 8.3.4.2, WALL SHALL EXTEND TO DECK.

NOTES:
ALL INTERIOR WALLS SHALL EXTEND TO DECK ABOVE UNLESS NOTED OTHERWISE.

PROVIDE 3" HIGH, BRIGHT RED STENCILED LETTERS VISIBLE ABOVE CEILING AT ALL CHANGES IN DIRECTION AND AT 30' INTERVALS ALONG ALL RATED WALLS READING: " ___ HOUR FIRE AND SMOKE BARRIER - PROTECT ALL OPENINGS." (INCORPORATE CORRECT WALL DESIGNATIONS) FIRE WALLS SHALL BE STENCILED ON BOTH SIDES OF WALLS.

FLOOR TRANSITION LEGEND

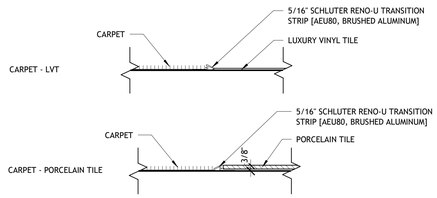

FINISH LEGEND

FLOOR

PT — PORCELAIN TILE (LOBBY)
MFG: PORTOBELLO
STYLE: SANDWAVES
SIZE: 24X48
COLOR: LIGHT
INSTALL: ASHLAR

PT2 — PORCELAIN TILE (RESTROOMS)
MFG: PORTOBELLO
STYLE: OHI TAKE
COLOR: CITY
SIZE: 24X48
INSTALL: ASHLAR

PT3 — PORCELAIN TILE (ELEVATOR TOWER)
MFG: PORTOBELLO
STYLE: OHI TAKE
COLOR: CITY
INSTALL: MONOLITHIC

CT1 — CARPET TILE
MFG: PATCRAFT
STYLE: 10530 - PERENNIAL
COLOR: 00546 - ASTER
INSTALL: MONOLITHIC

CT2 — CARPET TILE
MFG: MOHAWK
STYLE: GT433 SABBATICAL
COLOR: 458 SEMESTER
INSTALL: MONOLITHIC

FLOOR

CT3 — CARPET TILE
MFG: MANNINGTON
STYLE: CROSS TALK
COLOR: CUSTOM MS0142-001A-9
INSTALL: ASHLAR

LVT 1 — LUXURY VINYL TILE
MFG: SHAW
STYLE: FUNCTION 2.5
COLOR: PEBBLE - 86504
INSTALL: BRICK

SC — SEALED CONCRETE

RR — RADIAL RUBBER
SEE SPEC SECTION 09 65 00

WCT — WALKOFF CARPET (PLAZA LOBBY 101
MFG: MATTER SURFACES
STYLE: SUPER NOP 52 ROLL WITH TWO COLOR LOGO
COLOR: TBD

WALKOFF CARPET (REST OF BULDING)
MFG: SHAW OR PATCRAFT
SYTLE: PACE (PATCRAFT = MOVING)
COLOR TBD

BASE

PT — PORCELAIN TILE (LOBBY)
MFG: PORTOBELLO
STYLE: SANDWAVES
SIZE: 6" - REFER TO DETAIL 15/GN1.2
COLOR: LIGHT
INSTALL: ASHLAR

PT2 — PORCELAIN TILE
MFG: PORTOBELLO
STYLE: OHI TAKE
SIZE: 6" - REFER TO DETAIL 15/GN1.2
COLOR: CITY

RB — RUBBER BASE
MFG: FLEXCO (B.O.D.) OR APPROVED EQUAL BY ROPPE OR JOHNSONITE
STYLE: TS WALLFLOWERS RUBBER
COLOR: WF-090 NICKEL
SIZE: 4"

WALLS

P1 — PAINT (GENERAL)
MFG: SHERWIN WILLIAMS
APPROVED EQUAL BY BENJAMIN MOORE OR PPG
COLOR: SW7567 NATURAL TAN
FINISH: EGGSHELL

WALLS

P2 — PAINT (LOBBY BRICK)
MFG: SHERWIN WILLIAMS
APPROVED EQUAL BY BENJAMIN MOORE OR PPG
COLOR: SW7641 COLONNADE GRAY
FINISH: EGGSHELL

P3 — PAINT (PURPLE ACCENT)
MFG: SHERWIN WILLIAMS
APPROVED EQUAL BY BENJAMIN MOORE OR PPG
COLOR: TO BE DETERMINE
FINISH: EGGSHELL

WT — WALL TILE (RESTROOMS)
MFG: PORTOBELLO
STYLE: PORTOFINO
COLOR: SAND
SIZE: 12X24
INSTALL: MONOLITHIC

B — BRICK
COLOR: MATCH EXTERIOR - PAINT EXPOSED
BRICK INSIDE LOBBY

CEILINGS

AC1 — ACOUSTICAL CEILING TILE (OFFICES, CLASSROOMS)
REFER TO RCP

AC2 — ACOUSTICAL CEILING TILE (RESTROOMS)
REFER TO RCP

AC3 — ACOUSTICAL CEILING TILE (AUDITORIUM, PLAZA)
REFER TO RCP

GENERAL NOTES:
COORDINATE WITH SPECIFICATIONS FOR APPROVED EQUALS AND ALTERNATE MANUFACTURERS

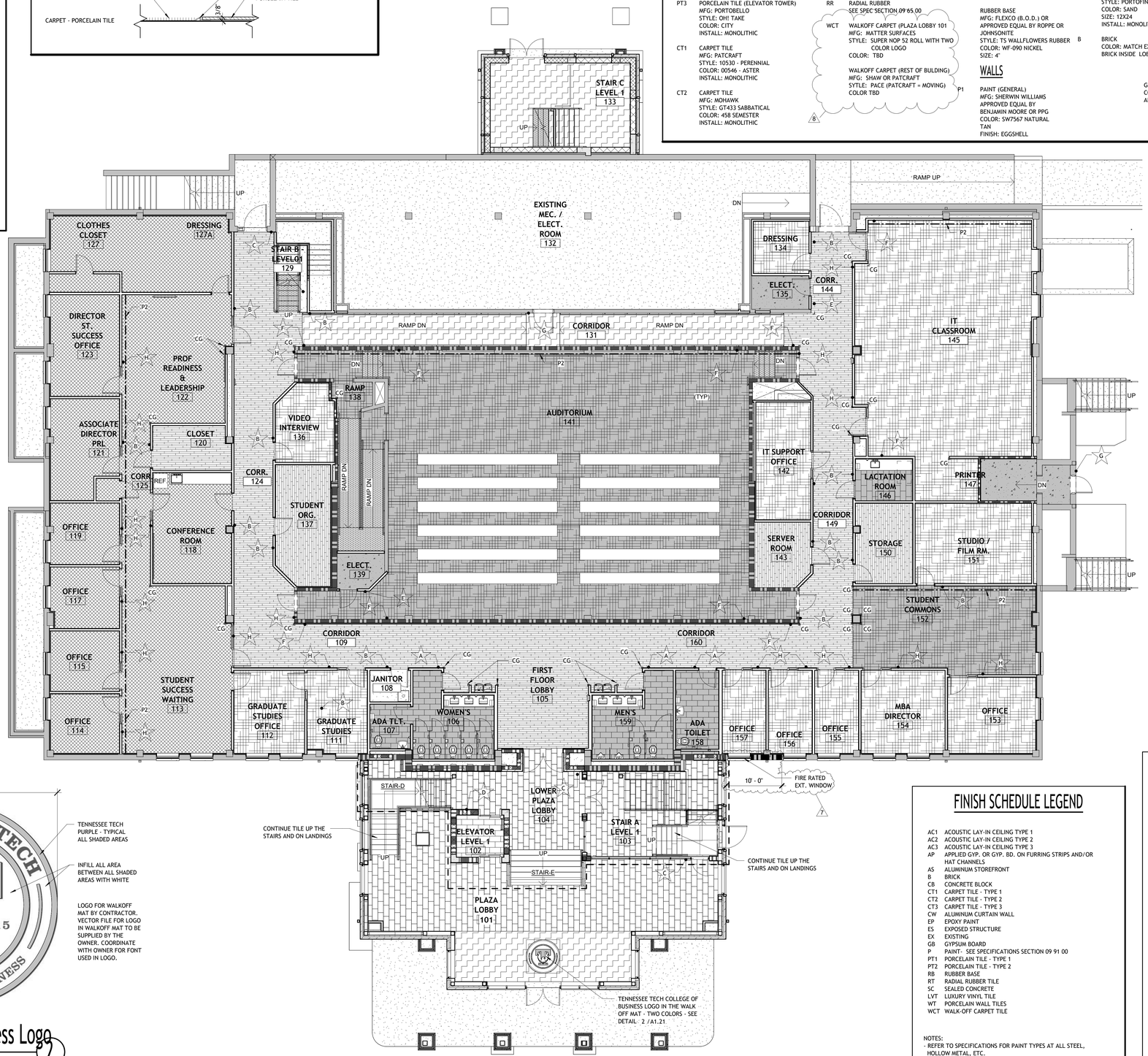

FINISH LEGEND

LVT 1 - LUXURY VINYL TILE FIELD
CT1 - CARPET TILE TYPE 1
CT2 - CARPET TILE TYPE 2
CT3 - CARPET TILE TYPE 3
WCT - WALK-OFF CARPET TILE
PT - PORCELAIN TILE FIELD *SEE FLOOR FINISH PLAN
PT2 -PORCELAIN TILE ACCENT *SEE FLOOR FINISH PLAN
SC - SEALED CONCRETE
C - CONCRETE
RR - RADIAL RUBBER
P2 - ACCENT COLOR WALL
SIGN TYPE SYMBOL - REFER TO GN1.1

NOTE: MORE THAN ONE COLOR MAY BE USED FOR EACH COLOR DESIGNATION

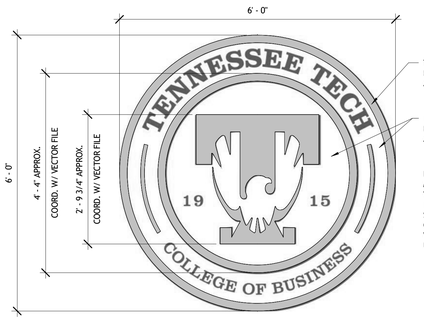

TENNESSEE TECH PURPLE - TYPICAL ALL SHADED AREAS

INFILL ALL AREA BETWEEN ALL SHADED AREAS WITH WHITE

LOGO FOR WALKOFF MAT BY CONTRACTOR. VECTOR FILE FOR LOGO IN WALKOFF MAT TO BE SUPPLIED BY THE OWNER. COORDINATE WITH OWNER FOR FONT USED IN LOGO.

TTU College of Business Logo 2

3/4" = 1'-0"

FIRST FLOOR RENOVATION - FINISH PLAN

1/8" = 1'-0"

FINISH SCHEDULE LEGEND

AC1	ACOUSTIC LAY-IN CEILING TYPE 1
AC2	ACOUSTIC LAY-IN CEILING TYPE 2
AC3	ACOUSTIC LAY-IN CEILING TYPE 3
AP	APPLIED GYP. OR GYP. BD. ON FURRING STRIPS AND/OR HAT CHANNELS
AS	ALUMINUM STOREFRONT
B	BRICK
CB	CONCRETE BLOCK
CT1	CARPET TILE - TYPE 1
CT2	CARPET TILE - TYPE 2
CT3	CARPET TILE - TYPE 3
CW	ALUMINUM CURTAIN WALL
EP	EPOXY PAINT
ES	EXPOSED STRUCTURE
EX	EXISTING
GB	GYPSUM BOARD
P	PAINT- SEE SPECIFICATIONS SECTION 09 91 00
PT1	PORCELAIN TILE - TYPE 1
PT2	PORCELAIN TILE - TYPE 2
RB	RUBBER BASE
RT	RADIAL RUBBER TILE
SC	SEALED CONCRETE
LVT	LUXURY VINYL TILE
WT	PORCELAIN WALL TILES
WCT	WALK-OFF CARPET TILE

NOTES:
- REFER TO SPECIFICATIONS FOR PAINT TYPES AT ALL STEEL, HOLLOW METAL, ETC.
- WALL LOCATIONS ARE BASED ON PLAN NORTH

FINISH SCHEDULE GENERAL NOTES

1. WALL LOCATIONS ARE BASED ON PLAN NORTH.
2. REFER TO INTERIOR ELEVATIONS FOR ACCENT PAINT LOCATIONS
3. PAINT ALL CONTROL JOINTS IN WALLS (CMU AND GYPSUM BOARD WALLS) TO MATCH ADJACENT WALL COLOR.
4. WALLS ADJACENT TO CEILING CLOUDS SHALL BE PAINTED TO ROOF DECK.
5. PAINT ALL GYPSUM BOARD FURR DOWNS AND SOFFITS. REFER TO INTERIOR ELEVATIONS AND REFLECTED CEILING PLANS FOR LOCATIONS.
6. PAINT ALL STRUCTURE, DUCTWORK, CONDUIT AND PIPING IN SPACES WITH CLOUD CEILING EXPOSED TO VIEW.
7. PROVIDE SOLID SURFACE SILLS FOR WINDOW OPENING (TYPICAL).
8. PROVIDE 1X STAIN GRADE WOOD TRIM SILLS FOR WINDOW OPENINGS (RADIUS EDGE TYPICAL).
9. PROVIDE WALL CORNER GUARDS AT ALL OUTSIDE GYPSUM BOARD WALL CORNERS AND CASED OPENINGS (TYPICAL) - COORDINATE WITH FLOOR PLANS.
10. PROVIDE MOISTURE RESISTANT TYPE GYPSUM BOARD IN WET AREAS (RESTROOMS AND ABOVE COUNTERTOPS WITH SINKS).
11. INSTALL PAINTED ZINC CONTROL JOINTS IN GYPSUM BOARD WALLS AS SHOWN ON INTERIOR ELEVATIONS.
12. PROVIDE CONTROL JOINTS IN GYPSUM BOARD AT A MIN. OF 30'-0" O.C. JOINTS SHALL BE AT EDGE OF DOOR OR WINDOW FRAME WHERE POSSIBLE TO PREVENT *MOVEMENT* / SETTLEMENT CRACKING. COORDINATE WITH FLOOR PLANS AND INTERIOR ELEVATIONS FOR LOCATIONS.
13. PROVIDE ABUSE RESISTANT GYPSUM BOARD FROM FLOOR TO 8 FEET HEIGHT IN ALL STUDENT OCCUPIED SPACES.

COMMUNITY TECTONICS ARCHITECTS
7610 Gleason Road Knoxville, TN 37919
Ph. (865) 637-0890 www.communitytectonics.com

Upland Design Group
P.O. Box 1026 Crossville, TN 38557
Ph. (931) 484-7541 www.uplanddesigngroup.com

W&O Construction
150 Construction Drive Livingston, TN 38570
Ph. (931) 403-1000 www.wocc.com

PROJECT
JOHNSON HALL RENOVATION - PKG 3
JOHNSON HALL RENOVATION & FOSTER DEMOLITION
SBC Nº 364/011-04-2022CM

OWNER: TENNESSEE TECH. UNIVERSITY
LOCATION: COOKEVILLE, TN

SEAL

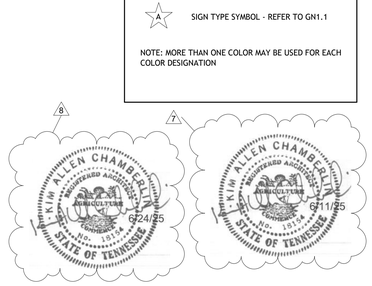

NO.	DESCRIPTION	DATE
7	Addendum 3 - PKG 3	6-11-25
8	Addendum 5 - PKG 3	6-24-25

JOB NO. 22025

ISSUE DATE 3-28-25

SHEET TITLE FINISH PLAN - 1ST FLOOR

DRAWN CWD

REVIEW KAC

A1.21

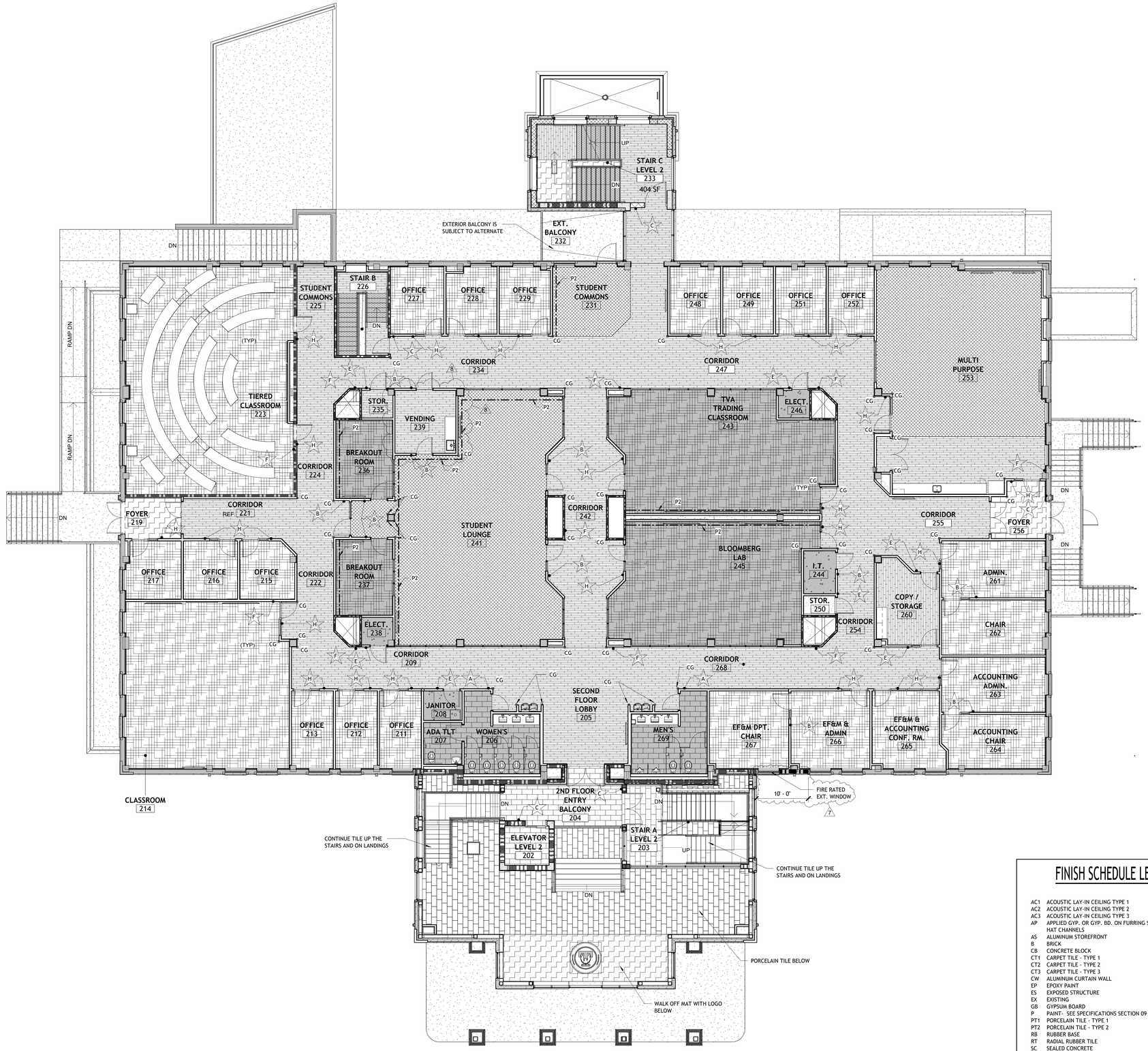

2ND FLR RENOVATION - FINISH PLAN

1/8" = 1'-0"

0 1' 2' 4' 8'

RATED WALL SYMBOL LEGEND

1-HOUR FIRE BARRIER

FLOOR TO UNDERSIDE OF DECK ABOVE AT CONC. BLOCK LOCATIONS (SEE FLOOR PLANS) USE UL DESIGN U905 (NONBEARING) AND UL DESIGN U905 (LOAD BEARING), TERMINATE AT METAL DECK WITH UL SYSTEMS HW-D-0022 (WALL PERPENDICULAR TO DECK) OR HW-D-0030 (WALL PARALLEL TO DECK FLUTES)

AT GYPSUM BOARD WALL LOCATIONS (SEE FLOOR PLANS) USE UL DESIGN U419 WITH; TERMINATE AT METAL DECK WITH UL SYSTEM HW-D-0024 (WALL PERPENDICULAR TO DECK FLUTES) OR HW-D-0029 (WALL PARALLEL TO DECK FLUTES)

2-HOUR FIRE BARRIER

FLOOR TO UNDERSIDE OF DECK ABOVE AT CONC. BLOCK LOCATIONS (SEE FLOOR PLANS) USE UL DESIGN U905 (NONBEARING) AND UL DESIGN U905 (LOAD BEARING), TERMINATE AT METAL DECK WITH UL SYSTEMS HW-D-0022 (WALL PERPENDICULAR TO DECK FLUTES) OR HW-D-0030 (WALL PARALLEL TO DECK FLUTES)

AT GYPSUM BOARD WALL LOCATIONS (SEE FLOOR PLANS) USE UL DESIGN U419 WITH; TERMINATE AT METAL DECK WITH UL SYSTEM HW-D-0024 (WALL PERPENDICULAR TO DECK FLUTES) OR HW-D-0029 (WALL PARALLEL TO DECK FLUTES)

SHAFT WALL - PER IBC 2012-SECTION 713.2
USE UL DESIGN U415, TERMINATE AT METAL DECK WITH UL SYSTEMS HW-D-0549 (FLOOR OR ROOF DECK WITH FLUTES) OR HW-D-0480 (FLOOR OR ROOF DECK WITHOUT FLUTES)

SMOKE PARTITION PER IBC 2012 SECTION 710 AND NFPA 8.3.4.2, WALL SHALL EXTEND TO DECK.

NOTES:
ALL INTERIOR WALLS SHALL EXTEND TO DECK ABOVE UNLESS NOTED OTHERWISE.

PROVIDE 3" HIGH, BRIGHT RED STENCILED LETTERS VISIBLE ABOVE CEILING AT ALL CHANGES IN DIRECTION AND AT 30' INTERVALS ALONG ALL RATED WALLS READING: "____ HOUR FIRE AND SMOKE BARRIER - PROTECT ALL OPENINGS." (INCORPORATE CORRECT WALL DESIGNATIONS) FIRE WALLS SHALL BE STENCILED ON BOTH SIDES OF WALLS.

FINISH LEGEND

LVT 1 - LUXURY VINYL TILE FIELD

CT1 - CARPET TILE TYPE 1

CT2 - CARPET TILE TYPE 2

CT3 - CARPET TILE TYPE 3

WCT - WALK-OFF CARPET TILE

PT - PORCELAIN TILE FIELD
*SEE FLOOR FINISH PLAN

PT2 -PORCELAIN TILE ACCENT
*SEE FLOOR FINISH PLAN

SC - SEALED CONCRETE

C - CONCRETE

RR - RADIAL RUBBER

P2 - ACCENT COLOR WALL

SIGN TYPE SYMBOL - REFER TO GN1.1

NOTE: MORE THAN ONE COLOR MAY BE USED FOR EACH COLOR DESIGNATION

FINISH SCHEDULE LEGEND

AC1	ACOUSTIC LAY-IN CEILING TYPE 1
AC2	ACOUSTIC LAY-IN CEILING TYPE 2
AC3	ACOUSTIC LAY-IN CEILING TYPE 3
AP	APPLIED GYP. OR GYP. BD. ON FURRING STRIPS AND/OR HAT CHANNELS
AS	ALUMINUM STOREFRONT
B	BRICK
CB	CONCRETE BLOCK
CT1	CARPET TILE - TYPE 1
CT2	CARPET TILE - TYPE 2
CT3	CARPET TILE - TYPE 3
CW	ALUMINUM CURTAIN WALL
EP	EPOXY PAINT
ES	EXPOSED STRUCTURE
EX	EXISTING
GB	GYPSUM BOARD
P	PAINT- SEE SPECIFICATIONS SECTION 09 91 00
PT1	PORCELAIN TILE - TYPE 1
PT2	PORCELAIN TILE - TYPE 2
RB	RUBBER BASE
RT	RADIAL RUBBER TILE
SC	SEALED CONCRETE
LVT	LUXURY VINYL TILE
WT	PORCELAIN WALL TILES
WCT	WALK-OFF CARPET TILE

NOTES:
- REFER TO SPECIFICATIONS FOR PAINT TYPES AT ALL STEEL, HOLLOW METAL, ETC.
- WALL LOCATIONS ARE BASED ON PLAN NORTH

FINISH SCHEDULE GENERAL NOTES

1. WALL LOCATIONS ARE BASED ON PLAN NORTH.
2. REFER TO INTERIOR ELEVATIONS FOR ACCENT PAINT LOCATIONS
3. PAINT ALL CONTROL JOINTS IN WALLS (CMU AND GYPSUM BOARD WALLS) TO MATCH ADJACENT WALL COLOR.
4. WALLS ADJACENT TO CEILING CLOUDS SHALL BE PAINTED TO ROOF DECK.
5. PAINT ALL GYPSUM BOARD FURR DOWNS AND SOFFITS. REFER TO INTERIOR ELEVATIONS AND REFLECTED CEILING PLANS FOR LOCATIONS.
6. PAINT ALL STRUCTURE, DUCTWORK, CONDUIT AND PIPING IN SPACES WITH CLOUD CEILING EXPOSED TO VIEW.
7. PROVIDE SOLID SURFACE SILLS FOR WINDOW OPENING (TYPICAL).
8. PROVIDE 1X STAIN GRADE WOOD TRIM SILLS FOR WINDOW OPENINGS (RADIUS EDGE TYPICAL).
9. PROVIDE WALL CORNER GUARDS AT ALL OUTSIDE GYPSUM BOARD WALL CORNERS AND CASED OPENINGS (TYPICAL) - COORDINATE WITH FLOOR PLANS.
10. PROVIDE MOISTURE RESISTANT TYPE GYPSUM BOARD IN WET AREAS (RESTROOMS AND ABOVE COUNTERTOPS WITH SINKS).
11. INSTALL PAINTED ZINC CONTROL JOINTS IN GYPSUM BOARD WALLS AS SHOWN ON INTERIOR ELEVATIONS.
12. PROVIDE CONTROL JOINTS IN GYPSUM BOARD AT A MIN. OF 30'-0" O.C. JOINTS SHALL BE AT EDGE OF DOOR OR WINDOW FRAME WHERE POSSIBLE TO PREVENT MOVEMENT / SETTLEMENT CRACKING. COORDINATE WITH FLOOR PLANS AND INTERIOR ELEVATIONS FOR LOCATIONS.
13. PROVIDE ABUSE RESISTANT GYPSUM BOARD FROM FLOOR TO 8 FEET HEIGHT IN ALL STUDENT OCCUPIED SPACES.

COMMUNITY TECTONICS ARCHITECTS
7610 Gleason Road, Knoxville, TN 37919
Ph. (865) 637-0890
www.communitytectonics.com

Upland Design Group
P.O. Box 11026, Cookeville, TN 38557
Ph. (931) 484-7541
www.uplanddesigngroup.com

W&Q Construction
150 Construction Drive, Livingston, TN 38570
Ph. (931) 403-1000
www.wcc.com

PROJECT
JOHNSON HALL RENOVATION - PKG 3
JOHNSON HALL RENOVATION & FOSTER DEMOLITION
SBC Nº 364/011-04-2022CM

OWNER
TENNESSEE TECH. UNIVERSITY

LOCATION
COOKEVILLE, TN

SEAL

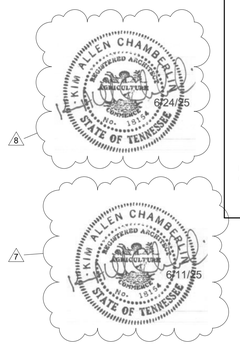

NO.	DESCRIPTION	DATE
7	Addendum 3 - PKG 3	6-11-25
8	Addendum 5 - PKG 3	6-24-25

JOB NO.
22025

ISSUE DATE
3-28-25

SHEET TITLE
FINISH PLAN - 2ND FLOOR

DRAWN
CWD

REVIEW
KAC

A1.22

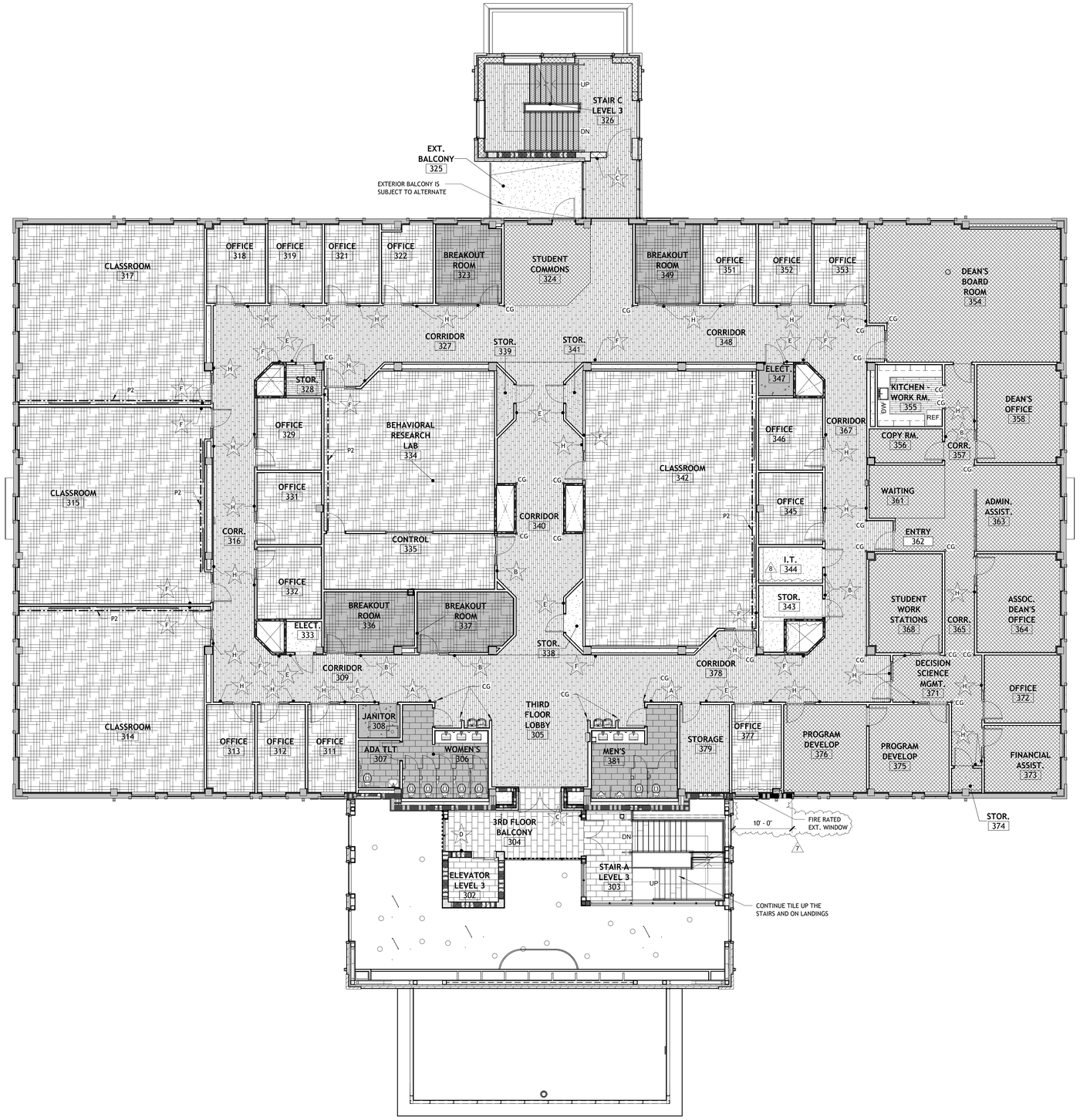

3RD FLR RENOVATION - FINISH PLAN

1/8" = 1'-0"

0 1' 2' 4' 8'

RATED WALL SYMBOL LEGEND

1-HOUR FIRE BARRIER

FLOOR TO UNDERSIDE OF DECK ABOVE AT CONC. BLOCK LOCATIONS (SEE FLOOR PLANS) USE UL DESIGN U905 (NONBEARING) AND UL DESIGN U905 (LOAD BEARING), TERMINATE AT METAL DECK WITH UL SYSTEMS HW-D-0022 (WALL PERPENDICULAR TO DECK) OR HW-D-0030 (WALL PARALLEL TO DECK FLUTES)

AT GYPSUM BOARD WALL LOCATIONS (SEE FLOOR PLANS) USE UL DESIGN U419 WITH; TERMINATE AT METAL DECK WITH UL SYSTEM HW-D-0024 (WALL PERPENDICULAR TO DECK FLUTES) OR HW-D-0029 (WALL PARALLEL TO DECK FLUTES)

2-HOUR FIRE BARRIER

FLOOR TO UNDERSIDE OF DECK ABOVE AT CONC. BLOCK LOCATIONS (SEE FLOOR PLANS) USE UL DESIGN U905 (NONBEARING) AND UL DESIGN U905 (LOAD BEARING), TERMINATE AT METAL DECK WITH UL SYSTEMS HW-D-0022 (WALL PERPENDICULAR TO DECK FLUTES) OR HW-D-0030 (WALL PARALLEL TO DECK FLUTES)

AT GYPSUM BOARD WALL LOCATIONS (SEE FLOOR PLANS) USE UL DESIGN U419 WITH; TERMINATE AT METAL DECK WITH UL SYSTEM HW-D-0024 (WALL PERPENDICULAR TO DECK FLUTES) OR HW-D-0029 (WALL PARALLEL TO DECK FLUTES)

SHAFT WALL - PER IBC 2012-SECTION 713.2
USE UL DESIGN U415, TERMINATE AT METAL DECK WITH UL SYSTEMS HW-D-0549 (FLOOR OR ROOF DECK WITH FLUTES) OR HW-D-0480 (FLOOR OR ROOF DECK WITHOUT FLUTES)

SMOKE PARTITION PER IBC 2012 SECTION 710 AND NFPA 8.3.4.2, WALL SHALL EXTEND TO DECK.

NOTES:
ALL INTERIOR WALLS SHALL EXTEND TO DECK ABOVE UNLESS NOTED OTHERWISE.

PROVIDE 3" HIGH, BRIGHT RED STENCILED LETTERS VISIBLE ABOVE CEILING AT ALL CHANGES IN DIRECTION AND AT 30' INTERVALS ALONG ALL RATED WALLS READING: " ___ HOUR FIRE AND SMOKE BARRIER - PROTECT ALL OPENINGS." (INCORPORATE CORRECT WALL DESIGNATIONS) FIRE WALLS SHALL BE STENCILED ON BOTH SIDES OF WALLS.

FINISH LEGEND

LVT 1 - LUXURY VINYL TILE FIELD

CT1 - CARPET TILE TYPE 1

CT2 - CARPET TILE TYPE 2

CT3 - CARPET TILE TYPE 3

WCT - WALK-OFF CARPET TILE

PT - PORCELAIN TILE FIELD
*SEE FLOOR FINISH PLAN

PT2 -PORCELAIN TILE ACCENT
*SEE FLOOR FINISH PLAN

SC - SEALED CONCRETE

C - CONCRETE

RR - RADIAL RUBBER

P2 - ACCENT COLOR WALL

SIGN TYPE SYMBOL - REFER TO GN1.1

NOTE: MORE THAN ONE COLOR MAY BE USED FOR EACH COLOR DESIGNATION

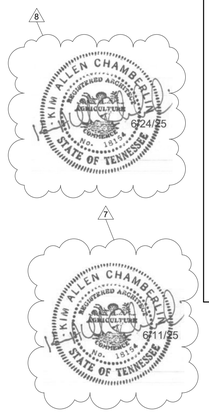

FINISH SCHEDULE LEGEND

AC1	ACOUSTIC LAY-IN CEILING TYPE 1
AC2	ACOUSTIC LAY-IN CEILING TYPE 2
AC3	ACOUSTIC LAY-IN CEILING TYPE 3
AP	APPLIED GYP. OR GYP. BD. ON FURRING STRIPS AND/OR HAT CHANNELS
AS	ALUMINUM STOREFRONT
B	BRICK
CB	CONCRETE BLOCK
CT1	CARPET TILE - TYPE 1
CT2	CARPET TILE - TYPE 2
CT3	CARPET TILE - TYPE 3
CW	ALUMINUM CURTAIN WALL
EP	EPOXY PAINT
ES	EXPOSED STRUCTURE
EX	EXISTING
GB	GYPSUM BOARD
P	PAINT- SEE SPECIFICATIONS SECTION 09 91 00
PT1	PORCELAIN TILE - TYPE 1
PT2	PORCELAIN TILE - TYPE 2
RB	RUBBER BASE
RT	RADIAL RUBBER TILE
SC	SEALED CONCRETE
LVT	LUXURY VINYL TILE
WT	PORCELAIN WALL TILES
WCT	WALK-OFF CARPET TILE

NOTES:
- REFER TO SPECIFICATIONS FOR PAINT TYPES AT ALL STEEL, HOLLOW METAL, ETC.
- WALL LOCATIONS ARE BASED ON PLAN NORTH

FINISH SCHEDULE GENERAL NOTES

1. WALL LOCATIONS ARE BASED ON PLAN NORTH.
2. REFER TO INTERIOR ELEVATIONS FOR ACCENT PAINT LOCATIONS
3. PAINT ALL CONTROL JOINTS IN WALLS (CMU AND GYPSUM BOARD WALLS) TO MATCH ADJACENT WALL COLOR.
4. WALLS ADJACENT TO CEILING CLOUDS SHALL BE PAINTED TO ROOF DECK.
5. PAINT ALL GYPSUM BOARD FURR DOWNS AND SOFFITS. REFER TO INTERIOR ELEVATIONS AND REFLECTED CEILING PLANS FOR LOCATIONS.
6. PAINT ALL STRUCTURE, DUCTWORK, CONDUIT AND PIPING IN SPACES WITH CLOUD CEILING EXPOSED TO VIEW.
7. PROVIDE SOLID SURFACE SILLS FOR WINDOW OPENING (TYPICAL).
8. PROVIDE 1X STAIN GRADE WOOD TRIM SILLS FOR WINDOW OPENINGS (RADIUS EDGE TYPICAL).
9. PROVIDE WALL CORNER GUARDS AT ALL OUTSIDE GYPSUM BOARD WALL CORNERS AND CASED OPENINGS (TYPICAL) - COORDINATE WITH FLOOR PLANS.
10. PROVIDE MOISTURE RESISTANT TYPE GYPSUM BOARD IN WET AREAS (RESTROOMS AND ABOVE COUNTERTOPS WITH SINKS).
11. INSTALL PAINTED ZINC CONTROL JOINTS IN GYPSUM BOARD WALLS AS SHOWN ON INTERIOR ELEVATIONS.
12. PROVIDE CONTROL JOINTS IN GYPSUM BOARD AT A MIN. OF 30'-0" O.C. JOINTS SHALL BE AT EDGE OF DOOR OR WINDOW FRAME WHERE POSSIBLE TO PREVENT MOVEMENT / SETTLEMENT CRACKING. COORDINATE WITH FLOOR PLANS AND INTERIOR ELEVATIONS FOR LOCATIONS.
13. PROVIDE ABUSE RESISTANT GYPSUM BOARD FROM FLOOR TO 8 FEET HEIGHT IN ALL STUDENT OCCUPIED SPACES.

COMMUNITY TECTONICS ARCHITECTS
7610 Gleason Road
Knoxville, TN 37919
Ph. (865) 637-0890
www.communitytectonics.com

Upland Design Group
P.O. Box 11026
Cookeville, TN 38557
Ph. (931) 484-7541
www.uplanddesigngroup.com

W&O Construction
150 Construction Drive
Livingston, TN 38570
Ph. (931) 403-1000
www.wocc.com

PROJECT
JOHNSON HALL RENOVATION - PKG 3
JOHNSON HALL RENOVATION & FOSTER DEMOLITION
SBC Nº 364/011-04-2022CM

OWNER
TENNESSEE TECH. UNIVERSITY

LOCATION
COOKEVILLE, TN

SEAL

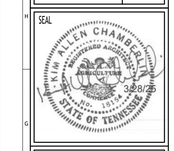

NO.	DESCRIPTION	DATE
7	Addendum 3 - PKG 3	6-11-25
8	Addendum 5 - PKG 3	6-24-25

JOB NO.
22025

ISSUE DATE
3-28-25

SHEET TITLE
FINISH PLAN - 3RD FLOOR

DRAWN
CWD

REVIEW
KAC

A1.23

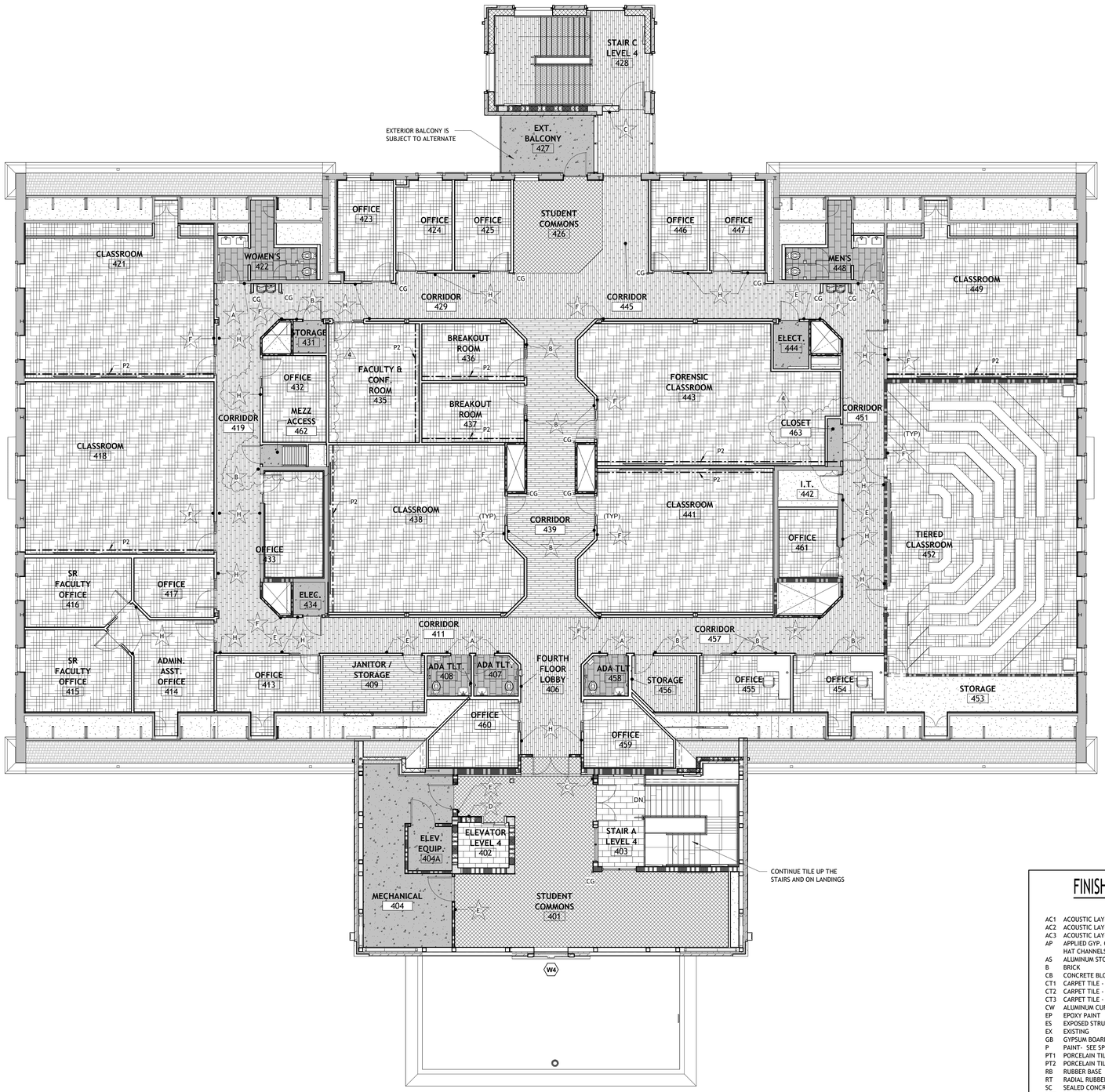

4TH FLOOR RENOVATION - FINISH PLAN

1/8" = 1'-0"

0 1'2' 4' 8'

RATED WALL SYMBOL LEGEND

1-HOUR FIRE BARRIER

FLOOR TO UNDERSIDE OF DECK ABOVE AT CONC. BLOCK LOCATIONS (SEE FLOOR PLANS) USE UL DESIGN U905 (NONBEARING) AND UL DESIGN U905 (LOAD BEARING), TERMINATE AT METAL DECK WITH UL SYSTEMS HW-D-0022 (WALL PERPENDICULAR TO DECK) OR HW-D-0030 (WALL PARALLEL TO DECK FLUTES)

AT GYPSUM BOARD WALL LOCATIONS (SEE FLOOR PLANS) USE UL DESIGN U419 WITH; TERMINATE AT METAL DECK WITH UL SYSTEM HW-D-0024 (WALL PERPENDICULAR TO DECK FLUTES) OR HW-D-0029 (WALL PARALLEL TO DECK FLUTES)

2-HOUR FIRE BARRIER

FLOOR TO UNDERSIDE OF DECK ABOVE AT CONC. BLOCK LOCATIONS (SEE FLOOR PLANS) USE UL DESIGN U905 (NONBEARING) AND UL DESIGN U905 (LOAD BEARING), TERMINATE AT METAL DECK WITH UL SYSTEMS HW-D-0022 (WALL PERPENDICULAR TO DECK FLUTES) OR HW-D-0030 (WALL PARALLEL TO DECK FLUTES)

AT GYPSUM BOARD WALL LOCATIONS (SEE FLOOR PLANS) USE UL DESIGN U419 WITH; TERMINATE AT METAL DECK WITH UL SYSTEM HW-D-0024 (WALL PERPENDICULAR TO DECK FLUTES) OR HW-D-0029 (WALL PARALLEL TO DECK FLUTES)

SHAFT WALL - PER IBC 2012-SECTION 713.2
USE UL DESIGN U415, TERMINATE AT METAL DECK WITH UL SYSTEMS HW-D-0549 (FLOOR OR ROOF DECK WITH FLUTES) OR HW-D-0480 (FLOOR OR ROOF DECK WITHOUT FLUTES)

SMOKE PARTITION PER IBC 2012 SECTION 710 AND NFPA 8.3.4.2, WALL SHALL EXTEND TO DECK.

NOTES:
ALL INTERIOR WALLS SHALL EXTEND TO DECK ABOVE UNLESS NOTED OTHERWISE.

PROVIDE 3" HIGH, BRIGHT RED STENCILED LETTERS VISIBLE ABOVE CEILING AT ALL CHANGES IN DIRECTION AND AT 30' INTERVALS ALONG ALL RATED WALLS READING: " ____ HOUR FIRE AND SMOKE BARRIER - PROTECT ALL OPENINGS." (INCORPORATE CORRECT WALL DESIGNATIONS) FIRE WALLS SHALL BE STENCILED ON BOTH SIDES OF WALLS.

FINISH LEGEND

LVT 1 - LUXURY VINYL TILE FIELD

CT1 - CARPET TILE TYPE 1

CT2 - CARPET TILE TYPE 2

CT3 - CARPET TILE TYPE 3

WCT - WALK-OFF CARPET TILE

PT - PORCELAIN TILE FIELD
*SEE FLOOR FINISH PLAN

PT2 -PORCELAIN TILE ACCENT
*SEE FLOOR FINISH PLAN

SC - SEALED CONCRETE

C - CONCRETE

RR - RADIAL RUBBER

P2 - ACCENT COLOR WALL

SIGN TYPE SYMBOL - REFER TO GN1.1

NOTE: MORE THAN ONE COLOR MAY BE USED FOR EACH COLOR DESIGNATION

8

4

FINISH SCHEDULE LEGEND

AC1	ACOUSTIC LAY-IN CEILING TYPE 1
AC2	ACOUSTIC LAY-IN CEILING TYPE 2
AC3	ACOUSTIC LAY-IN CEILING TYPE 3
AP	APPLIED GYP. OR GYP. BD. ON FURRING STRIPS AND/OR HAT CHANNELS
AS	ALUMINUM STOREFRONT
B	BRICK
CB	CONCRETE BLOCK
CT1	CARPET TILE - TYPE 1
CT2	CARPET TILE - TYPE 2
CT3	CARPET TILE - TYPE 3
CW	ALUMINUM CURTAIN WALL
EP	EPOXY PAINT
ES	EXPOSED STRUCTURE
EX	EXISTING
GB	GYPSUM BOARD
P	PAINT - SEE SPECIFICATIONS SECTION 09 91 00
PT1	PORCELAIN TILE - TYPE 1
PT2	PORCELAIN TILE - TYPE 2
RB	RUBBER BASE
RT	RADIAL RUBBER TILE
SC	SEALED CONCRETE
LVT	LUXURY VINYL TILE
WT	PORCELAIN WALL TILES
WCT	WALK-OFF CARPET TILE

NOTES:
- REFER TO SPECIFICATIONS FOR PAINT TYPES AT ALL STEEL, HOLLOW METAL, ETC.
- WALL LOCATIONS ARE BASED ON PLAN NORTH

FINISH SCHEDULE GENERAL NOTES

1. WALL LOCATIONS ARE BASED ON PLAN NORTH.
2. REFER TO INTERIOR ELEVATIONS FOR ACCENT PAINT LOCATIONS
3. PAINT ALL CONTROL JOINTS IN WALLS (CMU AND GYPSUM BOARD WALLS) TO MATCH ADJACENT WALL COLOR.
4. WALLS ADJACENT TO CEILING CLOUDS SHALL BE PAINTED TO ROOF DECK.
5. PAINT ALL GYPSUM BOARD FURR DOWNS AND SOFFITS. REFER TO INTERIOR ELEVATIONS AND REFLECTED CEILING PLANS FOR LOCATIONS.
6. PAINT ALL STRUCTURE, DUCTWORK, CONDUIT AND PIPING IN SPACES WITH CLOUD CEILING EXPOSED TO VIEW.
7. PROVIDE SOLID SURFACE SILLS FOR WINDOW OPENING (TYPICAL).
8. PROVIDE 1X STAIN GRADE WOOD TRIM SILLS FOR WINDOW OPENINGS (RADIUS EDGE TYPICAL).
9. PROVIDE WALL CORNER GUARDS AT ALL OUTSIDE GYPSUM BOARD WALL CORNERS AND CASED OPENINGS (TYPICAL) - COORDINATE WITH FLOOR PLANS.
10. PROVIDE MOISTURE RESISTANT TYPE GYPSUM BOARD IN WET AREAS (RESTROOMS AND ABOVE COUNTERTOPS WITH SINKS).
11. INSTALL PAINTED ZINC CONTROL JOINTS IN GYPSUM BOARD WALLS AS SHOWN ON INTERIOR ELEVATIONS.
12. PROVIDE CONTROL JOINTS IN GYPSUM BOARD AT A MIN. OF 30'-0" O.C. JOINTS SHALL BE AT EDGE OF DOOR OR WINDOW FRAME WHERE POSSIBLE TO PREVENT MOVEMENT / SETTLEMENT CRACKING. COORDINATE WITH FLOOR PLANS AND INTERIOR ELEVATIONS FOR LOCATIONS.
13. PROVIDE ABUSE RESISTANT GYPSUM BOARD FROM FLOOR TO 8 FEET HEIGHT IN ALL STUDENT OCCUPIED SPACES.

COMMUNITY TECTONICS ARCHITECTS
7610 Gleason Road, Knoxville, TN 37919
Ph. (865) 637-0890 www.communitytectonics.com

Upland Design Group
P.O. Box 11026, Cookeville, TN 38557
Ph. (931) 484-7541 www.uplanddesigngroup.com

W&Q Construction
150 Construction Drive, Livingston, TN 38570
Ph. (931) 403-1000 www.wqcc.com

PROJECT
JOHNSON HALL RENOVATION - PKG 3
JOHNSON HALL RENOVATION & FOSTER DEMOLITION
SBC Nº 364/011-04-2022CM

OWNER: TENNESSEE TECH. UNIVERSITY
LOCATION: COOKEVILLE, TN

SEAL

NO.	DESCRIPTION	DATE
4	Addendum 1 - PKG 3	5-16-25
8	Addendum 5 - PKG 3	6-24-25

JOB NO. 22025

ISSUE DATE 3-28-25

SHEET TITLE FINISH PLAN - 4TH FLOOR

DRAWN CWD

REVIEW KAC

A1.24

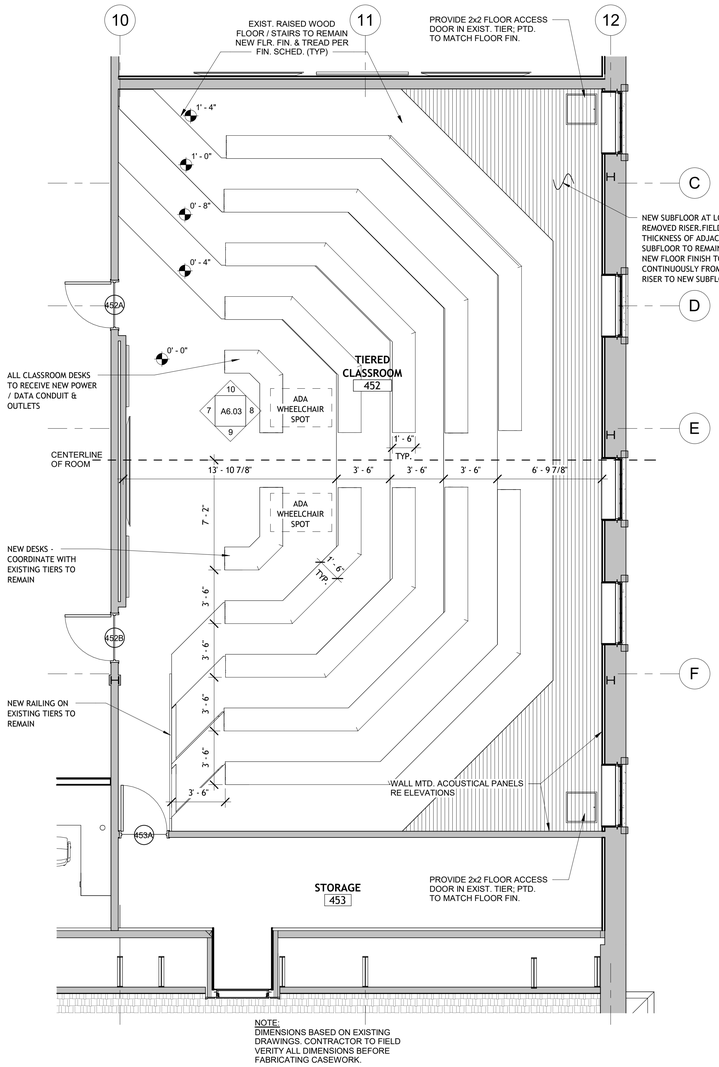

NOTE:
DIMENSIONS BASED ON EXISTING DRAWINGS. CONTRACTOR TO FIELD VERITY ALL DIMENSIONS BEFORE FABRICATING CASEWORK.

4TH FLOOR TIERED CLASSRM 1

1/4" = 1'-0"

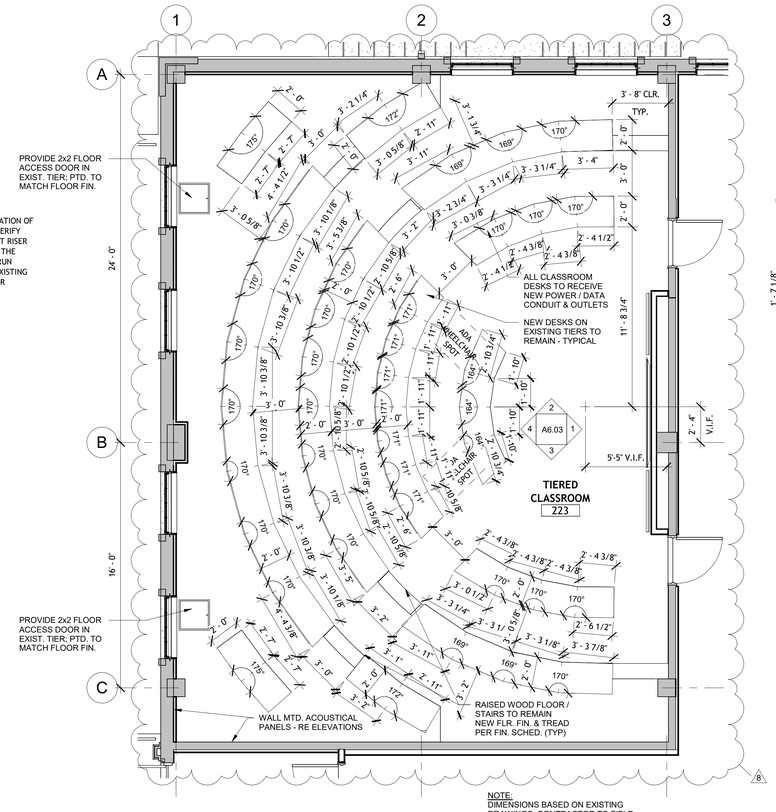

NOTE:
DIMENSIONS BASED ON EXISTING DRAWINGS. CONTRACTOR TO FIELD VERIFY ALL DIMENSIONS BEFORE FABRICATING CASEWORK.

2ND FLOOR TIERED CLASSRM 2

1/4" = 1'-0"

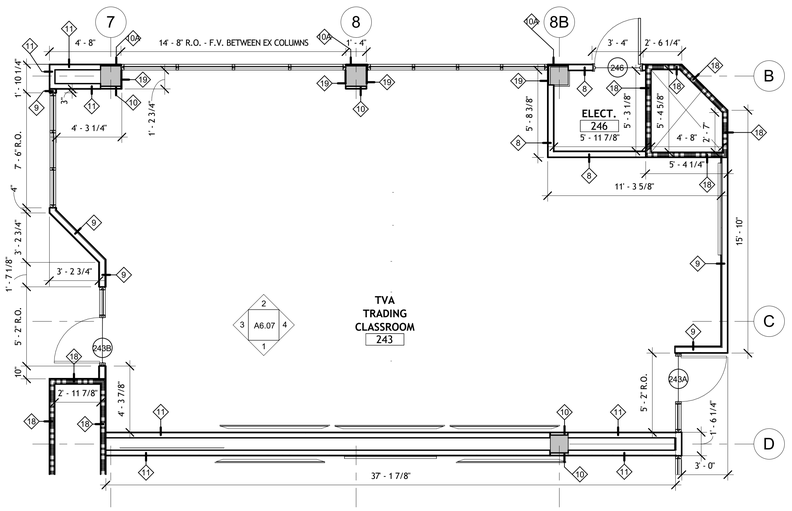

TVA TRADING ROOM 3

1/4" = 1'-0"

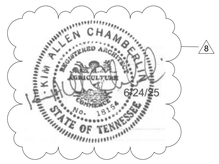

COMMUNITY TECTONICS ARCHITECTS
7610 Gleason Road, Knoxville, TN 37919
Ph. (865) 637-0890 www.communitytectonics.com

Upland Design Group
P.O. Box 1026, Crossville, TN 38557
Ph. (931) 484-7541 www.uplanddesigngroup.com

W&O Construction
150 Construction Drive, Livingston, TN 38570
Ph. (931) 403-1000 www.wocc.com

PROJECT
JOHNSON HALL RENOVATION - PKG 3
JOHNSON HALL RENOVATION & FOSTER DEMOLITION
SBC Nº 364/011-04-2022CM

OWNER: TENNESSEE TECH. UNIVERSITY
LOCATION: COOKEVILLE, TN

SEAL
STATE OF TENNESSEE
3/28/25

NO.	DESCRIPTION	DATE
8	Addendum 5 - PKG 3	6-24-25

JOB NO. 22025

ISSUE DATE 3-28-25

SHEET TITLE: ENLARGED CLASSROOM PLANS

DRAWN: CWD
REVIEW: KAC

A1.51

01 - FIRST FLOOR FINISH SCHEDULE

SPACE	DESCRIPTION	WAINSCOT	WSCT. HT.	FLOOR	BASE	MATERIALS WALLS N	MATERIALS WALLS E	MATERIALS WALLS S	MATERIALS WALLS W	MATERIALS CLG.	CLG. HEIGHT	FINISHES WALLS N	FINISHES WALLS E	FINISHES WALLS S	FINISHES WALLS W	FINISHES CLG.	REMARKS
001	MECHANICAL ROOM			EX	EX	EX	EX	EX	EX	ES	EX	-	-	-	-	-	
101	PLAZA LOBBY			PT/WCT	PT	AS/WT	GB/CW	GB/CW	GB/CW	AC3		-	P	P	P	-	WALK OFF MAT AT DOOR WITH LOGO, PORCELAIN STAIR TREADS
102	ELEVATOR LEVEL 1			PT	-	*	*	*	*	*		*	*	*	*	*	* COORDINATE WITH ELEVATOR SPECIFICATIONS
103	STAIR A LEVEL 1			PT	PT	EX/B	GB/CW	GB/AS	GB/AS	AC1	9'-5 3/4"	-	P	P	P		COORDINATE WITH INTERIOR ELEVATIONS FOR ACCENT PAINT LOCATIONS, PORCELAIN TILE ON STAIR TREADS
104	LOWER PLAZA LOBBY			PT	PT	EX/B	GB/AS	WT	-	AC3	9'-8"	-	P	-	-	-	PAINT EXISTING BRICK
105	FIRST FLOOR LOBBY			LVT	RB	AP	GB	GB	GB	AC1	7'-7"	P	P	P	P	-	
106	WOMEN'S			PT2	PT2	GB/WT	GB	GB/WT	GB	AC2	8'-1"	EP	EP	EP	EP	-	WALL TILE AT WET WALLS BEHIND SINKS AND TOILETS
107	ADA TLT.			PT2	PT2	GB	GB	WT	GB	AC2	8'-1"	EP	EP	-	EP	-	WALL TILE AT WET WALLS BEHIND SINKS AND TOILETS
108	JANITOR			SC	RB	GB	GB	GB	GB	ES	-	EP	EP	EP	EP	-	
109	CORRIDOR			LVT	RB	AP	-	GB	-	AC1	7'-11"	P	-	P	-	-	
111	GRADUATE STUDIES			CT3	RB	GB	GB	AP	GB	AC1	8'-6"	P	P	P	P	-	
112	GRADUATE STUDIES OFFICE			CT3	RB	GB	GB	AP	GB	AC1	8'-6"	P	P	P	P	-	
113	STUDENT SUCCESS WAITING			CT1	RB	GB	GB/AS	AP	GB	AC1	8'-4"	P	P	P	P	-	
114	OFFICE			CT1	RB	GB	GB	AP	AP	AC1	8'-4"	P	P	P	P	-	
115	OFFICE			CT1	RB	GB	GB	GB	AP	AC1	8'-4"	P	P	P	P	-	
116	CLOSET			CT1	RB	GB	GB	GB	GB	AC1	8'-4"	P	P	P	P	-	
117	OFFICE			CT1	RB	GB	GB	GB	AP	AC1	8'-4"	P	P	P	P	-	
118	CONFERENCE ROOM			CT1	RB	GB	GB	GB	GB	AC1	8'-4"	P	P	P	P	-	
119	OFFICE			CT1	RB	GB	GB	GB	AP	AC1	8'-4"	P	P	P	P	-	
120	CLOSET		8	LVT	RB	GB	GB	GB	GB	AC1	8'-0"	P	P	P	P	-	
121	ASSOCIATE DIRECTOR PRL			CT1	RB	GB	GB	GB	AP	AC1	8'-4"	P	P	P	P	-	
122	PROF READINESS & LEADERSHIP			CT1	RB	GB	GB	GB	GB	AC1	8'-4"	P	P	P	P	-	
123	DIRECTOR ST. SUCCESS OFFICE			CT1	RB	GB	GB	GB	AP	AC1	8'-4"	P	P	P	P	-	
124	CORR.		8	LVT	RB	EX	GB	GB	AP	AC1	7'-10"/8'-0"	P	P	P	P	-	DISPLAY/GRAPHICS PACKAGE - TBD
125	CORR.			CT1	RB	-	GB	-	GB	AC1	8'-4"	P	P	P	P	-	
126	CLOSET			CT1	RB	GB	GB	GB	EX	AC1	8'-0"	P	P	P	P	-	
127	CLOTHES CLOSET			CT1	RB	AP	GB	GB	AP	AC1	8'-6"	P	P	P	P	-	
127A	DRESSING			CT1	RB	AP	AP	-	-	AC1	8'-6"	P	P	-	-	-	
129	STAIR B - LEVEL01			RT	RB	GB	GB	-	-	-	-	P	P	-	-	-	PAINTED HANDRAILS
131	CORRIDOR			WCT	RB	EX	-	EX	-	AC1	7'-9"	P	-	P	-	-	
132	EXISTING MEC. / ELECT. ROOM			EX	-	EX	EX	EX	EX	ES	-	-	-	-	-	-	
133	STAIR C LEVEL 1			WCT	RB	CB	CB	CB	CB	-	-	P	P	P	P	-	RADIAL RUBBER TILE ON STAIRS
134	DRESSING			CT3	RB	GB	AP	GB	GB	AC1	8'-0"	P	P	P	P	-	
135	ELECT.			SC	RB	GB	EX	EX	EX	ES	-	-	-	-	-	-	
136	VIDEO INTERVIEW			CT3	RB	AP	GB/AP	GB	GB	AC1	8'-6"	P	P	P	P	-	
137	STUDENT ORG.			LVT	RB	GB	GB/AP	AP	GB	AC1	8'-6"	P	P	P	P	-	
138	RAMP			CT2	RB	EX	EX	GB	GB/EX	AC3	7'-6"	P	P	P	P	-	PAINTED HANDRAILS - RADIAL RUBBER TILE ON RAMPS
139	ELECT.			SC	RB	GB	EX	GB	EX	ES	-	-	-	-	-	-	
141	AUDITORIUM			CT2	RB	GB/EX	EX	EX	EX	AC3	7'-9"	P	P	P	P	-	ACOUSTIC WALL PANELS - SEE INTERIOR ELEVATIONS
142	IT SUPPORT OFFICE			CT3	RB	GB	GB	GB	GB/AP	AC1	8'-0"	P	P	P	P	-	
143	SERVER ROOM			LVT	RB	GB	GB	EX	EX	ES	-	P	P	P	P	-	
144	CORR.			LVT	RB	EX	GB	-	EX	AC1	7'-10"	P	P	-	P	-	
145	IT CLASSROOM			CT3	RB	GB	GB	GB	GB	AC1	8'-6"	P	P	P	P	-	
146	LACTATION ROOM			PT2	PT2	GB	GB	GB	GB	AC2	8'-6"	EP	EP	EP	EP	-	
147	PRINTER			CT3	RB	GB	GB	GB	GB	AC1	8'-6"	P	P	P	P	-	
148	FIRE PUMP ROOM			SC	-	GB	EX	GB	GB	ES	-	-	-	-	-	-	
149	CORRIDOR			LVT	RB	-	GB	GB	GB	AC1	7'-6"/7'10"/8'-0"/8'-1"	-	P	P	P	-	
150	STORAGE			LVT	RB	GB	GB	GB	GB	AC1	7'-6"	P	P	P	P	-	
151	STUDIO / FILM RM.			CT3	RB	GB	GB	GB	GB	AC1	8'-0"	P	P	P	P	-	
152	STUDENT COMMONS			CT2	RB	GB	AP	GB	-	AC1	7'-9"	P	P	P	-	-	
153	OFFICE			CT3	RB	GB	AP	AP	GB	AC1	8'-4"	P	P	P	P	-	
154	MBA DIRECTOR			CT3	RB	GB	GB	AP	GB	AC1	8'-4"	P	P	P	P	-	
155	OFFICE			CT3	RB	GB	GB	AP	GB	AC1	8'-4"	P	P	P	P	-	
156	OFFICE			CT3	RB	GB	GB	AP	GB	AC1	8'-4"	P	P	P	P	-	
157	OFFICE			CT3	RB	GB	GB	AP	GB	AC1	8'-4"	P	P	P	P	-	
158	ADA TOILET			PT2	PT2	GB	GB	GB	WT	AC2	8'-4"	EP	EP	EP	-	-	WALL TILE AT WET WALLS BEHIND SINKS AND TOILETS
159	MEN'S			PT2	PT2	GB/WT	GB	GB/WT	GB	AC2	8'-1"	EP	EP	-	EP	-	WALL TILE AT WET WALLS BEHIND SINKS AND TOILETS
160	CORRIDOR			LVT	RB	AP	-	GB	-	AC1	7'-6"	P	-	P	-	-	

02 - SECOND FLOOR FINISH SCHEDULE

SPACE	DESCRIPTION	WAINSCOT	WSCT. HT.	FLOOR	BASE	MATERIALS WALLS N	MATERIALS WALLS E	MATERIALS WALLS S	MATERIALS WALLS W	MATERIALS CLG.	Ceiling Height	FINISHES WALLS N	FINISHES WALLS E	FINISHES WALLS S	FINISHES WALLS W	FINISHES CLG.	REMARKS
202	ELEVATOR LEVEL 2																
203	STAIR A LEVEL 2			PT	PT	EX/B	GB/CW	GB/AS	GB/AS	AC3	9'-6"	P	P	P	P	-	PAINTED HANDRAILS, PORCELAIN TILE ON TREADS AND LANDINGS - PAINT EXISTING BRICK
204	2ND FLOOR ENTRY BALCONY			PT	PT	EX/B	GB/AS	PT	-	AC3	9'-8"	P	P	P	-	-	PAINT HANDRAILS, PAINT EXISTING BRICK
205	SECOND FLOOR LOBBY			LVT	RB	GB	GB	GB	GB	AC1	8'-1"	P	P	P	P	-	
206	WOMEN'S			PT2	PT2	GB/WT	GB	GB/WT	GB	AC2	8'-1"	EP	EP	-	EP	-	WALL TILE AT WET WALLS BEHIND SINKS AND TOILETS
207	ADA TLT			PT2	PT2	GB	GB	WT	GB	AC2	8'-1"	EP	EP	-	EP	-	WALL TILE AT WET WALLS BEHIND SINKS AND TOILETS
208	JANITOR			SC	RB	GB	GB	GB	GB	ES	-	EP	EP	EP	EP	-	
209	CORRIDOR			LVT	RB	GB/AS	-	GB	-	AC1	8'-1"	P	-	P	-	-	
211	OFFICE			CT3	RB	GB	GB	AP	GB	AC1	8'-6"	P	P	P	P	-	
212	OFFICE			CT3	RB	GB	GB	AP	GB	AC1	8'-6"	P	P	P	P	-	
213	OFFICE			CT3	RB	GB	GB	AP	GB	AC1	8'-6"	P	P	P	P	-	
214	CLASSROOM			CT3	RB	GB	GB	AP	AP	AC1	8'-6"	P	P	P	P	-	
215	OFFICE			CT3	RB	GB	GB	GB	GB	AC1	8'-1"	P	P	P	P	-	
216	OFFICE			CT3	RB	GB	GB	GB	GB	AC1	8'-1"	P	P	P	P	-	
217	OFFICE			CT3	RB	GB	GB	GB	GB/AP	AC1	8'-1"	P	P	P	P	-	
219	FOYER			WCT	RB	GB	GB	GB	AP	AC1	8'-1"	P	P	P	P	-	
221	CORRIDOR			LVT	RB	GB	-	GB	GB	AC1	8'-1"	P	-	P	P	-	
222	CORRIDOR			LVT	RB	-	GB	GB	GB	AC1	8'-1"	-	-	P	P	-	
223	TIERED CLASSROOM			CT3	RB	AP	GB/AP	EX	GB	AC1	8'-6"	P	P	P	P	-	ACOUSTIC WALL PANELS - SEE INTERIOR ELEVATIONS
224	CORRIDOR			LVT	RB	-	GB	-	AP	AC1	8'-1"	P	P	P	P	-	
225	STUDENT COMMONS			LVT	RB	AP	GB	-	AP	AC1	8'-1"	P	P	-	P	-	
226	STAIR B			RT	RB	GB	GB	GB	GB	AC1	9'-4"	P	P	P	P	-	PAINTED HANDRAILS
227	OFFICE			CT3	RB	AP	GB	GB	GB	AC1	8'-6"	P	P	P	P	-	
228	OFFICE			CT3	RB	AP	GB	GB	GB	AC1	8'-6"	P	P	P	P	-	
229	OFFICE			CT3	RB	AP	GB	GB	GB	AC1	8'-6"	P	P	P	P	-	
231	STUDENT COMMONS			CT1	RB	AP	-	-	GB	AC1	8'-0"	P	-	-	P	-	
232	EXT. BALCONY			SC	-	B	CW	EX	-	ES		-	-	-	-	-	EXTERIOR BALCONY IS SUBJECT TO ALTERNATE
233	STAIR C LEVEL 2			RT/LVT	RB	CB	CB	CB	CB	AC1	9'-2"	P	P	P	P	-	PAINTED HANDRAILS, RADIAL RUBBER TILE ON TREADS
234	CORRIDOR			LVT	RB	GB	-	GB/AS	-	AC1	8'-1"	P	-	P	-	-	
235	STOR.			LVT	RB	GB	GB	GB	GB	ES	-	P	P	P	P	-	
236	BREAKOUT ROOM			CT2	RB	GB	GB/AS	GB	GB	AC1	8'-0"	P	P	P	P	-	COORDINATE WITH FINISH PLANS FOR ACCENT WALLS LOCATIONS
237	BREAKOUT ROOM			CT2	RB	GB	GB/AS	GB	GB	AC1	8'-0"	P	P	P	P	-	COORDINATE WITH FINISH PLANS FOR ACCENT WALLS LOCATIONS
238	ELECT.			SC	RB	GB	GB	GB	GB	ES	-	P	P	P	P	-	
239	VENDING			LVT	RB	GB	GB	GB	GB	AC1	8'-1"	P	P	P	P	-	
241	STUDENT LOUNGE			CT1	RB	GB/AS	GB/AS	GB/AS	GB/AS	AC1	8'-6"	P	P	P	P	-	COORDINATE WITH FINISH PLANS FOR ACCENT WALLS LOCATIONS
242	CORRIDOR			LVT	RB	-	GB/AS	-	GB/AS	AC1	8'-1"	-	P	-	P	-	
243	TVA TRADING CLASSROOM			CT2	RB	GB/AS	GB	GB	GB/AS	AC1	8'-6"	P	P	P	P	-	ELECTRONIC TICKER
244	I.T.			SC	RB	GB	GB	GB	GB	ES	-	P	P	P	P	-	
245	BLOOMBERG LAB			CT2	RB	GB	GB	GB/AS	GB/AS	AC1	8'-6"	P	P	P	P	-	ELECTRONIC TICKER
246	ELECT.			SC	RB	GB	GB	GB	GB	ES	-	P	P	P	P	-	
247	CORRIDOR			LVT	RB	GB	-	GB	-	AC1	8'-1"	P	-	P	-	-	
248	OFFICE			CT3	RB	AP	GB	GB	GB	AC1	8'-6"	P	P	P	P	-	
249	OFFICE			CT3	RB	AP	GB	GB	GB	AC1	8'-6"	P	P	P	P	-	
250	STOR.			LVT	RB	GB	GB	GB	GB	AC1	8'-1"	P	P	P	P	-	
251	OFFICE			CT3	RB	AP	GB	GB	GB	AC1	8'-6"	P	P	P	P	-	
252	OFFICE			CT3	RB	AP	GB	GB	GB	AC1	8'-6"	P	P	P	P	-	
253	MULTI PURPOSE			LVT/CT1	RB	GB/AP	GB/AP	GB	GB/AS	AC1	8'-6"	P	P	P	P	-	* SEE FLOOR PLAN FOR TRANISITION BETWEEN VCT AND CT
254	CORRIDOR			LVT	RB	GB	GB	-	GB	AC1	8'-1"	P	P	-	P	-	
255	CORRIDOR			LVT	RB	GB	GB	GB	-	AC1	8'-1"	P	P	P	-	-	
256	FOYER			WCT	RB	GB	AP	GB	GB	AC1	8'-1"	P	P	P	P	-	
260	COPY / STORAGE			LVT	RB	GB	GB	GB	GB	AC1	8'-6"	P	P	P	P	-	
261	ADMIN.			CT3	RB	GB	AP	GB	GB	AC1	8'-6"	P	P	P	P	-	
262	CHAIR			CT3	RB	GB	AP	GB	GB	AC1	8'-6"	P	P	P	P	-	
263	ACCOUNTING ADMIN.			CT3	RB	GB	AP	GB	GB	AC1	8'-6"	P	P	P	P	-	
264	ACCOUNTING CHAIR			CT3	RB	GB	AP	AP	GB	AC1	8'-6"	P	P	P	P	-	
265	EF&M & ACCOUNTING CONF. RM.			CT3	RB	AS	GB	AP	GB	AC1	8'-6"	-	P	P	P	-	
266	EF&M & ADMIN			CT3	RB	GB	GB	AP	GB	AC1	8'-6"	P	P	P	P	-	
267	EF&M DPT. CHAIR			CT3	RB	GB	GB	AP	GB	AC1	8'-6"	P	P	P	P	-	
268	CORRIDOR			LVT	RB	GB/AS	GB	GB/AS	-	AC1	8'-1"	P	P	P	P	-	
269	MEN'S			PT2	PT2	GB/WT	GB	GB/WT	GB	AC2	8'-1"	EP	EP	-	EP	-	WALL TILE AT WET WALLS BEHIND SINKS AND TOILETS

FINISH LEGEND

FLOOR

PT — PORCELAIN TILE (LOBBY)
MFG: PORTOBELLO
STYLE: SANDWAVES
SIZE: 24X48
COLOR: LIGHT
INSTALL: ASHLAR

PT2 — PORCELAIN TILE (RESTROOMS)
MFG: PORTOBELLO
STYLE: OH! TAKE
COLOR: CITY
SIZE: 24X48
INSTALL: ASHLAR

PT3 — PORCELAIN TILE (ELEVATOR TOWER)
MFG: PORTOBELLO
STYLE: OH! TAKE
COLOR: CITY
INSTALL: MONOLITHIC

CT1 — CARPET TILE
MFG: PATCRAFT
STYLE: 10530 - PERENNIAL
COLOR: 00546 - ASTER
INSTALL: MONOLITHIC

CT2 — CARPET TILE
MFG: MOHAWK
STYLE: GT433 SABBATICAL
COLOR: 458 SEMESTER
INSTALL: MONOLITHIC

FLOOR

CT3 — CARPET TILE
MFG: MANNINGTON
STYLE: CROSS TALK
COLOR: CUSTOM M50142-001A-9
INSTALL: ASHLAR

LVT 1 — LUXURY VINYL TILE
MFG: SHAW
STYLE: FUNCTION 2.5
COLOR: PEBBLE - 86504
INSTALL: BRICK

SC — SEALED CONCRETE

RR — RADIAL RUBBER
SEE SPEC SECTION 09 65 00

WCT — WALKOFF CARPET (PLAZA LOBBY 101
MFG: MATTER SURFACES
STYLE: SUPER NOP 52 ROLL WITH TWO COLOR LOGO
COLOR: TBD

WALKOFF CARPET (REST OF BULDING)
MFG: SHAW OR PATCRAFT
SYTLE: PACE (PATCRAFT + MOVING)
COLOR TBD

8

BASE

PT — PORCELAIN TILE (LOBBY)
MFG: PORTOBELLO
STYLE: SANDWAVES
SIZE: 6" - REFER TO DETAIL 15/GN1.2
COLOR: LIGHT
INSTALL: ASHLAR

8

PT2 — PORCELAIN TILE
MFG: PORTOBELLO
STYLE: OH! TAKE
SIZE: 6" - REFER TO DETAIL 15/GN1.2
COLOR: CITY

8

RB — RUBBER BASE
MFG: FLEXCO (B.O.D.) OR APPROVED EQUAL BY ROPPE OR JOHNSONITE
STYLE: TS WALLFLOWERS RUBBER
COLOR: WF-090 NICKEL
SIZE: 4"

WALLS

P1 — PAINT (GENERAL)
MFG: SHERWIN WILLIAMS
APPROVED EQUAL BY BENJAMIN MOORE OR PPG
COLOR: SW7567 NATURAL TAN
FINISH: EGGSHELL

WALLS

P2 — PAINT (LOBBY BRICK)
MFG: SHERWIN WILLIAMS
APPROVED EQUAL BY BENJAMIN MOORE OR PPG
COLOR: SW7641 COLONNADE GRAY
FINISH: EGGSHELL

P3 — PAINT (PURPLE ACCENT)
MFG: SHERWIN WILLIAMS
APPROVED EQUAL BY BENJAMIN MOORE OR PPG
COLOR: TO BE DETERMINE
FINISH: EGGSHELL

WT — WALL TILE (RESTROOMS)
MFG: PORTOBELLO
STYLE: PORTOFINO
COLOR: SAND
SIZE: 12X24
INSTALL: MONOLITHIC

B — BRICK
COLOR: MATCH EXTERIOR - PAINT EXPOSED BRICK INSIDE LOBBY

CEILINGS

AC1 — ACOUSTICAL CEILING TILE (OFFICES, CLASSROOMS)
REFER TO RCP

AC2 — ACOUSTICAL CEILING TILE (RESTROOMS)
REFER TO RCP

AC3 — ACOUSTICAL CEILING TILE (AUDITORIUM, PLAZA)
REFER TO RCP

GENERAL NOTES:
COORDINATE WITH SPECIFICATIONS FOR APPROVED EQUALS AND ALTERNATE MANUFACTURERS

8

FINISH SCHEDULE LEGEND

AC1 ACOUSTIC LAY-IN CEILING TYPE 1
AC2 ACOUSTIC LAY-IN CEILING TYPE 2
AC3 ACOUSTIC LAY-IN CEILING TYPE 3
AP APPLIED GYP. OR GYP. BD. ON FURRING STRIPS AND/OR HAT CHANNELS
AS ALUMINUM STOREFRONT
B BRICK
CB CONCRETE BLOCK
CT1 CARPET TILE - TYPE 1
CT2 CARPET TILE - TYPE 2
CT3 CARPET TILE - TYPE 3
CW ALUMINUM CURTAIN WALL
EP EPOXY PAINT
ES EXPOSED STRUCTURE
EX EXISTING
GB GYPSUM BOARD
P PAINT - SEE SPECIFICATIONS SECTION 09 91 00
PT1 PORCELAIN TILE - TYPE 1
PT2 PORCELAIN TILE - TYPE 2
RB RUBBER BASE
RT RADIAL RUBBER TILE
SC SEALED CONCRETE
LVT LUXURY VINYL TILE
WT PORCELAIN WALL TILES
WCT WALK-OFF CARPET TILE

NOTES:
- REFER TO SPECIFICATIONS FOR PAINT TYPES AT ALL STEEL, HOLLOW METAL, ETC.
- WALL LOCATIONS ARE BASED ON PLAN NORTH

FINISH SCHEDULE GENERAL NOTES

1. WALL LOCATIONS ARE BASED ON PLAN NORTH.
2. REFER TO INTERIOR ELEVATIONS FOR ACCENT PAINT LOCATIONS
3. PAINT ALL CONTROL JOINTS IN WALLS (CMU AND GYPSUM BOARD WALLS) TO MATCH ADJACENT WALL COLOR.
4. WALLS ADJACENT TO CEILING CLOUDS SHALL BE PAINTED TO ROOF DECK.
5. PAINT ALL GYPSUM BOARD FURR DOWNS AND SOFFITS. REFER TO INTERIOR ELEVATIONS AND REFLECTED CEILING PLANS FOR LOCATIONS.
6. PAINT ALL STRUCTURE, DUCTWORK, CONDUIT AND PIPING IN SPACES WITH CLOUD CEILING EXPOSED TO VIEW.
7. PROVIDE SOLID SURFACE SILLS FOR WINDOW OPENING (TYPICAL).
8. PROVIDE 1X STAIN GRADE WOOD TRIM SILLS FOR WINDOW OPENINGS (RADIUS EDGE TYPICAL).
9. PROVIDE WALL CORNER GUARDS AT ALL OUTSIDE GYPSUM BOARD WALL CORNERS AND CASED OPENINGS (TYPICAL) - COORDINATE WITH FLOOR PLANS.
10. PROVIDE MOISTURE RESISTANT TYPE GYPSUM BOARD IN WET AREAS (RESTROOMS AND ABOVE COUNTERTOPS WITH SINKS).
11. INSTALL PAINTED ZINC CONTROL JOINTS IN GYPSUM BOARD WALLS AS SHOWN ON INTERIOR ELEVATIONS.
12. PROVIDE CONTROL JOINTS IN GYPSUM BOARD AT A MIN. OF 30'-0" O.C. JOINTS SHALL BE AT EDGE OF DOOR OR WINDOW FRAME WHERE POSSIBLE TO PREVENT MOVEMENT / SETTLEMENT CRACKING. COORDINATE WITH FLOOR PLANS AND INTERIOR ELEVATIONS FOR LOCATIONS.
13. PROVIDE ABUSE RESISTANT GYPSUM BOARD FROM FLOOR TO 8 FEET HEIGHT IN ALL STUDENT OCCUPIED SPACES.

FINISH LEGEND

LVT 1 - LUXURY VINYL TILE FIELD
CT1 - CARPET TILE TYPE 1
CT2 - CARPET TILE TYPE 2
CT3 - CARPET TILE TYPE 3
WCT - WALK-OFF CARPET TILE
PT - PORCELAIN TILE FIELD *SEE FLOOR FINISH PLAN
PT2 -PORCELAIN TILE ACCENT *SEE FLOOR FINISH PLAN
SC - SEALED CONCRETE
C - CONCRETE
RR - RADIAL RUBBER
P2 - ACCENT COLOR WALL
A — SIGN TYPE SYMBOL - REFER TO GN1.1

8

NOTE: MORE THAN ONE COLOR MAY BE USED FOR EACH COLOR DESIGNATION

COMMUNITY TECTONICS ARCHITECTS
7610 Gleason Road, Knoxville, TN 37919
Ph. (865) 637-0890 www.communitytectonics.com

Upland Design Group
P.O. Box 1026, Crossville, TN 38557
Ph. (931) 484-7541 www.uplanddesigngroup.com

W&O Construction
150 Construction Drive, Livingston, TN 38570
Ph. (931) 403-1000 www.wocc.com

PROJECT
JOHNSON HALL RENOVATION - PKG 3
JOHNSON HALL RENOVATION & FOSTER DEMOLITION
SBC Nº 364/011-04-2022CM

LOCATION
COOKEVILLE, TN

OWNER
TENNESSEE TECH. UNIVERSITY

SEAL
RICHARD ALLEN CHAMBERLIN
REGISTERED ARCHITECT
ARCHITECTURE
STATE OF TENNESSEE
6/24/25

NO.	DESCRIPTION	DATE
8	Addendum 5 - PKG 3	6-24-25

JOB NO. 22025

ISSUE DATE 3-28-25

SHEET TITLE
FINISH SCHEDULE - 1ST AND 2ND FLOORS

DRAWN CWD

REVIEW KAC

A2.1

03 - THIRD FLOOR FINISH SCHEDULE

SPACE	DESCRIPTION	WAINSCOT	WSCT. HT.	FLOOR	BASE	MATERIALS WALLS N	MATERIALS WALLS E	MATERIALS WALLS S	MATERIALS WALLS W	MATERIALS CLG.	Ceiling Height	FINISHES WALLS N	FINISHES WALLS E	FINISHES WALLS S	FINISHES WALLS W	FINISHES CLG.	REMARKS
302	ELEVATOR LEVEL 3																
303	STAIR A LEVEL 3			PT	PT	EX/B	GB/CW	GB/AS	GB/AS	AC3	9'-6"	P	P	P	P	-	PAINTED HANDRAILS, PORCELAIN TILE ON TREADS AND LANDINGS - PAINT EXISTING BRICK
304	3RD FLOOR BALCONY			PT	PT	EX/B	GB	AS/PT	AS	AC3	9'-4"	P	P	-	-	-	
305	THIRD FLOOR LOBBY			LVT	RB	GB	GB	GB	GB	AC1	8'-1"	P	P	P	P	-	
306	WOMEN'S			PT2	PT2	GB/WT	GB	WT	GB	AC2	8'-1"	EP	EP	-	EP	-	WALL TILE AT WET WALLS BEHIND SINKS AND TOILETS
307	ADA TLT			PT2	PT2	GB	GB	WT	GB	AC2	8'-1"	EP	EP	-	EP	-	* WALL TILE GOES UP TO 5'-0'. EPOXY PAINT ABOVE WALL TILE
308	JANITOR			SC	RB	GB	GB	GB	GB	ES	-	EP	EP	EP	EP	-	
309	CORRIDOR			LVT	RB	GB	-	GB	-	AC1	8'-1"	P	-	P	-	-	
311	OFFICE			CT3	RB	GB	GB	AP	GB	AC1	8'-6"	P	P	P	P	-	
312	OFFICE			CT3	RB	GB	GB	AP	GB	AC1	8'-6"	P	P	P	P	-	
313	OFFICE			CT3	RB	GB	GB	AP	GB	AC1	8'-6"	P	P	P	P	-	
314	CLASSROOM			CT3	RB	GB	GB	AP	AP	AC1	8'-6"	P	P	P	P	-	
315	CLASSROOM			CT3	RB	GB	GB	GB	AP	AC1	8'-6"	P	P	P	P	-	
316	CORR.			LVT	RB	GB	GB	GB	GB	AC1	8'-1"	P	P	P	P	-	
317	CLASSROOM			CT3	RB	AP	GB	GB	AP	AC1	8'-6"	P	P	P	P	-	
318	OFFICE			CT3	RB	AP	GB	GB	GB	AC1	8'-6"	P	P	P	P	-	
319	OFFICE			CT3	RB	AP	GB	GB	GB	AC1	8'-6"	P	P	P	P	-	
321	OFFICE			CT3	RB	AP	GB	GB	GB	AC1	8'-6"	P	P	P	P	-	
322	OFFICE			CT3	RB	AP	GB	GB	GB	AC1	8'-6"	P	P	P	P	-	
323	BREAKOUT ROOM			CT2	RB	AP	GB	GB	GB	AC1	8'-6"	P	P	P	P	-	
324	STUDENT COMMONS			CT1	RB	EX	-	-	GB	AC1	8'-6"	P	-	-	P	-	
325	EXT. BALCONY			SC	-	B	CW	EX	-	ES	-	-	-	-	-	-	EXTERIOR BALCONY IS SUBJECT TO ALTERNATE
326	STAIR C LEVEL 3			RT/LVT	RB	CB	CB	CB	CB	AC1	9'-2"	P	P	P	P	-	PAINTED HANDRAILS, RADIAL RUBBER TILE ON TREADS
327	CORRIDOR			LVT	RB	GB/AS	-	GB	-	AC1	8'-1"	P	-	P	-	-	
328	STOR.			LVT	RB	GB	GB	GB	GB	ES	-	P	P	P	P	-	
329	OFFICE			CT3	RB	GB	GB	GB	GB	AC1	8'-3"	P	P	P	P	-	
331	OFFICE			CT3	RB	GB	GB	GB	GB	AC1	8'-3"	P	P	P	P	-	
332	OFFICE			CT3	RB	GB	GB	GB	GB	AC1	8'-3"	P	P	P	P	-	
333	ELECT.			SC	RB	GB	GB	GB	GB	ES	-	P	P	P	P	-	
334	BEHAVIORAL RESEARCH LAB			CT3	RB	GB	GB	GB	GB	AC1	8'-6"	P	P	P	P	-	
335	CONTROL			CT3	RB	GB	GB	GB	GB	AC1	8'-2"	P	P	P	P	-	
336	BREAKOUT ROOM			CT2	RB	GB	GB	GB	GB	AC1	8'-6"	P	P	P	P	-	
337	BREAKOUT ROOM			CT2	RB	GB	GB	GB	GB	AC1	8'-6"	P	P	P	P	-	
338	STOR.			LVT	RB	GB	GB	GB	GB	ES	-	P	P	P	P	-	
339	STOR.			LVT	RB	GB	GB	GB	GB	ES	-	P	P	P	P	-	
340	CORRIDOR			LVT	RB	-	GB	-	GB	AC1	8'-1"	-	P	-	P	-	
341	STOR.			LVT	RB	GB	GB	GB	GB	ES	-	P	P	P	P	-	
342	CLASSROOM			CT3	RB	GB	GB	GB	GB	AC1	8'-6"	P	P	P	P	-	
343	STOR.		8	SC	RB	GB	GB	GB	GB	AC1	8'-6"	P	P	P	P	-	
344	I.T.			SC	RB	GB	GB	GB	GB	ES	-	P	P	P	P	-	
345	OFFICE			CT3	RB	GB	GB	GB	GB	AC1	8'-6"	P	P	P	P	-	
346	OFFICE			CT3	RB	GB	GB	GB	GB	AC1	8'-6"	P	P	P	P	-	
347	ELECT.			SC	RB	GB	GB	GB	GB	ES	-	P	P	P	P	-	
348	CORRIDOR			LVT	RB	GB	-	GB	-	AC1	8'-1"	P	-	P	-	-	
349	BREAKOUT ROOM			CT2	RB	AP	GB	GB	GB	AC1	8'-6"	P	P	P	P	-	
351	OFFICE			CT3	RB	AP	GB	GB	GB	AC1	8'-6"	P	P	P	P	-	
352	OFFICE			CT3	RB	AP	GB	GB	GB	AC1	8'-6"	P	P	P	P	-	
353	OFFICE			CT3	RB	AP	GB	GB	GB	AC1	8'-6"	P	P	P	P	-	
354	DEAN'S BOARD ROOM			CT1	RB	GB/AP	AP	GB	GB	AC3	8'-6"	P	P	P	P	-	
355	KITCHEN - WORK RM.			LVT	RB	GB	GB	GB	GB	AC3	8'-6"	P	P	P	P	-	
356	COPY RM.			CT1	RB	GB	GB	GB	GB	AC3	8'-0"	P	P	P	P	-	
357	CORR.			CT1	RB	GB	GB	-	GB	AC3	8'-1"	P	P	-	P	-	
358	DEAN'S OFFICE			CT1	RB	GB	AP	GB	GB	AC3	8'-6"	P	P	P	P	-	
361	WAITING			CT1	RB	GB	-	GB	GB	AC3	8'-0"	P	-	P	P	-	
362	ENTRY			CT1	RB	-	-	GB	GB	AC3	8'-0"	-	-	P	P	-	
363	ADMIN. ASSIST.			CT1	RB	GB	AP	GB	-	AC3	8'-6"	P	P	P	-	-	
364	ASSOC. DEAN'S OFFICE			CT1	RB	AP	GB	GB	GB	AC3	8'-6"	P	P	P	P	-	
365	CORR.			CT1	RB	-	GB	-	GB	AC3	8'-1"	-	P	-	P	-	
367	CORRIDOR			LVT	RB	GB	AP	GB	GB	AC1	8'-1"	P	P	P	P	-	
368	STUDENT WORK STATIONS			CT1	RB	GB	GB	GB	GB	AC3	8'-6"	P	P	P	P	-	
371	DECISION SCIENCE MGMT.			CT1	RB	GB	GB	GB	GB	AC3	8'-1"	P	P	P	P	-	
372	OFFICE			CT1	RB	GB	AP	GB	GB	AC3	8'-6"	P	P	P	P	-	
373	FINANCIAL ASSIST.			CT1	RB	GB	AP	AP	GB	AC3	8'-6"	P	P	P	P	-	
374	STOR.			CT1	RB	GB	GB	EX	GB	AC3	8'-1"	P	P	P	P	-	
375	PROGRAM DEVELOP			CT1	RB	GB	GB	AP	GB	AC3	8'-6"	P	P	P	P	-	
376	PROGRAM DEVELOP			CT1	RB	GB	GB	AP	GB	AC1	8'-6"	P	P	P	P	-	
377	OFFICE			CT3	RB	GB	GB	AP	GB	AC1	8'-6"	P	P	P	P	-	
378	CORRIDOR			LVT	RB	GB	-	GB	-	AC1	8'-1"	P	-	P	-	-	
379	STORAGE			LVT	RB	GB	GB	AP	GB	AC1	8'-6"	P	P	P	P	-	
381	MEN'S			PT2	PT2	GB/WT	GB	WT	GB	AC2	8'-1"	EP	EP	-	EP	-	WALL TILE AT WET WALLS BEHIND SINKS AND TOILETS

04 - FOURTH FLOOR FINISH SCHEDULE

SPACE	DESCRIPTION	WAINSCOT	WSCT. HT.	FLOOR	BASE	MATERIALS WALLS N	MATERIALS WALLS E	MATERIALS WALLS S	MATERIALS WALLS W	MATERIALS CLG.	Ceiling Height	FINISHES WALLS N	FINISHES WALLS E	FINISHES WALLS S	FINISHES WALLS W	FINISHES CLG.	REMARKS
401	STUDENT COMMONS			CT1	RB	EX/B	GB	GB	GB/WT	GB	VARIES	P	P	P	P	P	
402	ELEVATOR LEVEL 4																
403	STAIR A LEVEL 4			PT	PT	EX/B	GB/CW	GB/AS	GB/AS	GB	VARIES	-	P	P	P	P	PAINTED HANDRAILS, PORCELAIN TILE ON TREADS AND LANDINGS - PAINT EXISTING BRICK
404	MECHANICAL			SC	-	EX/B	GB	GB	GB	ES	VARIES	-	-	-	-	-	
404A	ELEV. EQUIP.			SC	-	B	GB/CB	GB	GB	ES	VARIES	-	-	-	-	-	
406	FOURTH FLOOR LOBBY			LVT	RB	-	GB	GB	GB	AC1	8'-1"	-	P	P	P	-	
407	ADA TLT.			PT2	PT2	GB	GB	WT	GB	ES	VARIES	EP	EP	-	EP	EP	WALL TILE AT WET WALLS BEHIND SINKS AND TOILETS
408	ADA TLT.			PT2	PT2	GB	GB	WT	GB	ES	VARIES	EP	EP	EP	EP	EP	WALL TILE AT WET WALLS BEHIND SINKS AND TOILETS
409	JANITOR / STORAGE			LVT	RB	GB	GB	EX	GB	ES	VARIES	EP	EP	EP	EP	EP	
411	CORRIDOR			LVT	RB	GB	-	GB	-	AC1	8'-1"	P	-	P	-	-	
413	OFFICE			CT3	RB	GB	GB	AP	GB	ES	VARIES	P	P	P	P	-	
414	ADMIN. ASST. OFFICE			CT3	RB	GB	GB	AP	GB	AC1	7'-2"	P	P	P	P	-	
415	SR FACULTY OFFICE			CT3	RB	GB	GB	AP	AP	AC1	7'-2"	P	P	P	P	-	
416	SR FACULTY OFFICE			CT3	RB	GB	GB	GB	AP	AC1	9'-0"	P	P	P	P	-	
417	OFFICE			CT3	RB	GB	GB	GB	GB	AC1	9'-0"	P	P	P	P	-	
418	CLASSROOM			CT3	RB	GB	GB	GB	AP	AC1	9'-0"	P	P	P	P	-	
419	CORRIDOR			LVT	RB	EX	EX	GB	AP	AC1	8'-1"	P	P	P	P	-	
421	CLASSROOM			CT3	RB	GB	GB/AP	GB	AP	AC1/EX	8'-0"	P	P	P	P	P	
422	WOMEN'S			PT2	PT2	GB/WT	GB/WT	EX	GB	EX	VARIES	EP	EP	EP	EP	EP	WALL TILE AT WET WALLS BEHIND SINKS AND TOILETS
423	OFFICE			CT3	RB	AP	GB	GB	AP	AC1	9'-0"	P	P	P	P	-	
424	OFFICE			CT3	RB	AP	GB	GB	AP	AC1	9'-0"	P	P	P	P	-	
425	OFFICE			CT3	RB	AP	GB	GB	GB	AC1	9'-0"	P	P	P	P	-	
426	STUDENT COMMONS			CT1	RB	AP	-	-	GB	AC1	8'-6"	P	-	-	P	-	
427	EXT. BALCONY			SC	-	B	CW	EX	-	ES	14'-0"	-	-	-	-	-	EXTERIOR BALCONY IS SUBJECT TO ALTERNATE
428	STAIR C LEVEL 4			RT/LVT	RB	CB	CB	CB	CB	AC1	11'-3"	P	P	P	P	-	PAINTED HANDRAILS - RADIAL RUBBER TILE ON STAIRS
429	CORRIDOR			LVT	RB	GB/EX	-	GB	-	AC1	8'-1"	P	-	P	-	-	
431	STORAGE			SC	RB	GB	GB	GB/EX	GB	ES	-	P	P	P	P	-	
432	OFFICE			CT3	RB	EX	GB	EX	EX	AC1	8'-6"	P	P	P	P	-	
433	OFFICE			CT3	RB	EX	EX	EX	EX	AC1	8'-6"	P	P	P	P	-	
434	ELEC.			SC	RB	EX	EX	GB	GB	ES	-	P	P	P	P	-	
435	FACULTY & CONF. ROOM			CT3	RB	GB	GB	GB	GB	AC1	8'-6"	P	P	P	P	-	
436	BREAKOUT ROOM			CT3	RB	GB	GB	GB	GB	AC1	8'-6"	P	P	P	P	-	
437	BREAKOUT ROOM			CT3	RB	GB	GB	GB	GB	AC1	8'-6"	P	P	P	P	-	
438	CLASSROOM			CT3	RB	GB	GB	GB	GB/AP	AC1	9'-0"	P	P	P	P	-	
439	CORRIDOR			LVT	RB	-	GB	-	GB	AC1	8'-1"	-	P	-	P	-	
441	CLASSROOM			CT3	RB	GB	AP	GB	GB	AC1	9'-0"	P	P	P	P	-	
442	I.T.			SC	RB	EX	EX	GB	EX	ES	-	P	P	P	P	-	
443	FORENSIC CLASSROOM			CT3	RB	GB	AP	GB/AP	GB	AC1	9'-0"	P	P	P	P	-	
444	ELECT.			SC	RB	GB	GB	GB/AP	GB	ES	-	P	P	P	P	-	
445	CORRIDOR			LVT	RB	GB/AP	GB	GB	-	AC1	8'-1"	P	P	P	-	-	
446	OFFICE			CT3	RB	AP	GB	GB	GB	AC1	9'-0"	P	P	P	P	-	
447	OFFICE			CT3	RB	AP	AP	GB	GB	AC1	9'-0"	P	P	P	P	-	
448	MEN'S			PT2	PT2	GB/WT	EX	EX	GB/WT	EX	VARIES	EP	EP	EP	EP	EP	WALL TILE AT WET WALLS BEHIND SINKS AND TOILETS
449	CLASSROOM			CT3	RB	GB	AP	AP	EX	AC1/EX	8'-0"	P	P	P	P	P	
451	CORRIDOR			LVT	RB	EX	EX	GB	AP	AC1	8'-1"	P	P	P	P	-	
452	TIERED CLASSROOM			CT3	RB	EX	AP	EX	EX	AC1	9'-4"	P	P	P	P	-	ACOUSTIC WALL PANELS - SEE INTERIOR ELEVATIONS
453	STORAGE			SC	RB	EX	EX	EX	EX	ES	VARIES	P	P	P	P	-	
454	OFFICE			CT3	RB	GB	GB	EX	AP	GB	EX	VARIES	P	P	P	P	P
455	OFFICE			CT3	RB	GB	GB	AP	GB	EX	VARIES	P	P	P	P	P	
456	STORAGE			LVT	RB	GB	GB	AP	GB	EX	VARIES	P	P	P	P	P	
457	CORRIDOR			LVT	RB	GB/AP	-	GB	-	AC1	8'-1"	P	P	P	P	-	
458	ADA TLT.			PT2	PT2	GB	GB	WT	GB	EX	VARIES	EP	EP	EP	EP	EP	WALL TILE AT WET WALLS BEHIND SINKS AND TOILETS
459	OFFICE			CT3	RB	GB	GB	AP	GB	AC1	8'-1"	P	P	P	P	-	
460	OFFICE			CT3	RB	GB	GB	AP	GB	AC1	8'-1"	P	P	P	P	-	
461	OFFICE			CT3	RB	GB	AP	AP	AP	AC1	8'-6"	P	P	P	P	-	
462	MEZZ ACCESS			SC	-	GB	GB	EX	GB	ES	-	P	P	P	P	-	
463	CLOSET			SC	RB	GB	GB	EX	GB	GB	9'-2 1/2"	P	P	P	P	P	
501	WEST MEZZANINE			EX	-	-	-	-	-	EX	-	-	-	-	-	-	
502	EAST MEZZANINE			EX	-	-	-	-	-	EX	-	-	-	-	-	-	

4

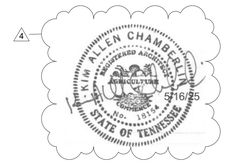

8

FINISH SCHEDULE GENERAL NOTES

1. WALL LOCATIONS ARE BASED ON PLAN NORTH.
2. REFER TO INTERIOR ELEVATIONS FOR ACCENT PAINT LOCATIONS
3. PAINT ALL CONTROL JOINTS IN WALLS (CMU AND GYPSUM BOARD WALLS) TO MATCH ADJACENT WALL COLOR.
4. WALLS ADJACENT TO CEILING CLOUDS SHALL BE PAINTED TO ROOF DECK.
5. PAINT ALL GYPSUM BOARD FURR DOWNS AND SOFFITS. REFER TO INTERIOR ELEVATIONS AND REFLECTED CEILING PLANS FOR LOCATIONS.
6. PAINT ALL STRUCTURE, DUCTWORK, CONDUIT AND PIPING IN SPACES WITH CLOUD CEILING EXPOSED TO VIEW.
7. PROVIDE SOLID SURFACE SILLS FOR WINDOW OPENING (TYPICAL).
8. PROVIDE 1X STAIN GRADE WOOD TRIM SILLS FOR WINDOW OPENINGS (RADIUS EDGE TYPICAL).
9. PROVIDE WALL CORNER GUARDS AT ALL OUTSIDE GYPSUM BOARD WALL CORNERS AND CASED OPENINGS (TYPICAL) - COORDINATE WITH FLOOR PLANS.
10. PROVIDE MOISTURE RESISTANT TYPE GYPSUM BOARD IN WET AREAS (RESTROOMS AND ABOVE COUNTERTOPS WITH SINKS).
11. INSTALL PAINTED ZINC CONTROL JOINTS IN GYPSUM BOARD WALLS AS SHOWN ON INTERIOR ELEVATIONS.
12. PROVIDE CONTROL JOINTS IN GYPSUM BOARD AT A MIN. OF 30'-0" O.C. JOINTS SHALL BE AT EDGE OF DOOR OR WINDOW FRAME WHERE POSSIBLE TO PREVENT MOVEMENT / SETTLEMENT CRACKING. COORDINATE WITH FLOOR PLANS AND INTERIOR ELEVATIONS FOR LOCATIONS.
13. PROVIDE ABUSE RESISTANT GYPSUM BOARD FROM FLOOR TO 8 FEET HEIGHT IN ALL STUDENT OCCUPIED SPACES.

FINISH SCHEDULE LEGEND

AC1	ACOUSTIC LAY-IN CEILING TYPE 1
AC2	ACOUSTIC LAY-IN CEILING TYPE 2
AC3	ACOUSTIC LAY-IN CEILING TYPE 3
AP	APPLIED GYP. OR GYP. BD. ON FURRING STRIPS AND/OR HAT CHANNELS
AS	ALUMINUM STOREFRONT
B	BRICK
CB	CONCRETE BLOCK
CT1	CARPET TILE - TYPE 1
CT2	CARPET TILE - TYPE 2
CT3	CARPET TILE - TYPE 3
CW	ALUMINUM CURTAIN WALL
EP	EPOXY PAINT
ES	EXPOSED STRUCTURE
EX	EXISTING
GB	GYPSUM BOARD
P	PAINT- SEE SPECIFICATIONS SECTION 09 91 00
PT1	PORCELAIN TILE - TYPE 1
PT2	PORCELAIN TILE - TYPE 2
RB	RUBBER BASE
RT	RADIAL RUBBER TILE
SC	SEALED CONCRETE
LVT	LUXURY VINYL TILE
WT	PORCELAIN WALL TILES
WCT	WALK-OFF CARPET TILE

NOTES:
- REFER TO SPECIFICATIONS FOR PAINT TYPES AT ALL STEEL, HOLLOW METAL, ETC.
- WALL LOCATIONS ARE BASED ON PLAN NORTH

COMMUNITY TECTONICS ARCHITECTS
7610 Gleason Road, Knoxville, TN 37919
Ph. (865) 637-0890 www.communitytectonics.com

Upland Design Group
P.O. Box 1026, Crossville, TN 38557
Ph. (931) 484-7541 www.uplanddesigngroup.com

W&O Construction
150 Construction Drive, Livingston, TN 38570
Ph. (931) 403-1000 www.wocc.com

PROJECT
JOHNSON HALL RENOVATION - PKG 3
JOHNSON HALL RENOVATION & FOSTER DEMOLITION
SBC Nº 364/011-04-2022CM

LOCATION
COOKEVILLE, TN

OWNER
TENNESSEE TECH. UNIVERSITY

SEAL

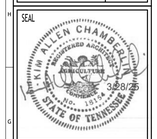

NO.	DESCRIPTION	DATE
4	Addendum 1 - PKG 3	5-16-25
8	Addendum 5 - PKG 3	6-24-25

JOB NO. 22025

ISSUE DATE 3-28-25

SHEET TITLE
FINISH SCHEDULE - 3RD AND 4TH FLOORS

DRAWN CWD

REVIEW KAC

A2.2

DOOR SCHEDULE - FIRST FLOOR

DOOR NO.	TYPE	NO. LEAFS	OPENING SIZE W	OPENING SIZE H	THICKNESS	MATERIAL	LABEL	UNDER CUT	GLASS TYPE	HARDWARE	FRAME TYPE	FRAME MATERIAL	DETAIL HEAD	DETAIL TRANS.	DETAIL JAMB	DETAIL SILL	REMARKS
101	FG	2	6' - 0"	7' - 0"	0' - 1 3/4"	AL			B	AL-1	XVIII	AL	12/21	7/12	23/92	14/24	CURTAINWALL DOOR; EXTERIOR; SECURITY CARD READER, DOOR ASSIST
103A	NLR	2	6' - 0"	7' - 0"	0' - 1 3/4"	WD	B90	-	E	5	XII	HM	93	-	60	-	FAIL-SAFE HOLD OPEN DOOR HARDWARE
103B	FG	1	4' - 0"	7' - 0"	0' - 1 3/4"	AL			B	AL-4	IXX	AL	5/12	7/12	2/48/92	19/20	CURTAINWALL DOOR; EXTERIOR
103C	NLR	1	3' - 0"	6' - 8"	0' - 1 3/4"	WD	B90		E	8	XV	AL	32/35	30	29/31/36	-	
105	F	2	7' - 0"	7' - 0"	0' - 1 3/4"	WD	C45			5 -	IV	HM	53	-	54	-	FAIL-SAFE HOLD OPEN DOOR
106	F	1	3' - 0"	7' - 0"	0' - 1 3/4"	WD	-	-	-	13	I	HM	49	-	50	-	
107	F	1	3' - 0"	7' - 0"	0' - 1 3/4"	WD	-	-	-	14	I	HM	49	-	50	-	
108	F	1	3' - 0"	7' - 0"	0' - 1 3/4"	WD	-	-	-	15	I	HM	49	-	50	-	
111	F	1	3' - 0"	7' - 0"	0' - 1 3/4"	WD	-	-	-	16	VI	HM	49/70	71	50/72/73	-	
112A	F	1	3' - 0"	7' - 0"	0' - 1 3/4"	WD	-	-	-	16	VI	HM	49/70	71	50/72/73	-	
112B	FG	1	3' - 0"	7' - 0"	0' - 1 3/4"	WD	-	-	A	16	I	HM	49	-	50	-	
113	FG	1	3' - 0"	7' - 0"	0' - 1 3/4"	WD	-	-	A	17	VIII	HM	49/70	71	50/72/73	-	
114	F	1	3' - 0"	7' - 0"	0' - 1 3/4"	WD	-	-	-	16	VI	HM	49/70	71	50/72/73	-	
115	F	1	3' - 0"	7' - 0"	0' - 1 3/4"	WD	-	-	-	16	VI	HM	49/70	71	50/72/73	-	
116	F	1	3' - 0"	7' - 0"	0' - 1 3/4"	WD	-	-	-	16	I	HM	49	-	50	-	
117	F	1	3' - 0"	7' - 0"	0' - 1 3/4"	WD	-	-	-	16	VI	HM	49/70	71	50/72/73	-	
118A	F	1	3' - 0"	7' - 0"	0' - 1 3/4"	WD	-	-	-	16	VI	HM	49/70	71	50/72/73	-	
118B	F	1	3' - 0"	7' - 0"	0' - 1 3/4"	WD	-	-	-	16	I	HM	49	-	50	-	
119	F	1	3' - 0"	7' - 0"	0' - 1 3/4"	WD	-	-	-	16	VI	HM	49/70	71	50/72/73	-	
120	F	1	3' - 0"	7' - 0"	0' - 1 3/4"	WD	-	-	-	16	I	HM	49	-	50	-	
121	F	1	3' - 0"	7' - 0"	0' - 1 3/4"	WD	-	-	-	16	VI	HM	49/70	71	50/72/73	-	
122	F	1	3' - 0"	7' - 0"	0' - 1 3/4"	WD	-	-	-	17	VI	HM	49/70	71	50/72/73	-	
123	F	1	3' - 0"	7' - 0"	0' - 1 3/4"	WD	-	-	-	16	VI	HM	49/70	71	50/72/73	-	
124	HG	1	4' - 0"	7' - 0"	0' - 1 3/4"	HM	-	-	B	1	V	HM	51/66	71	52/67/73	68/69	
126	F	1	3' - 0"	7' - 0"	0' - 1 3/4"	WD	-	-	-	16	I	HM	49	-	50	-	
127	F	1	3' - 0"	7' - 0"	0' - 1 3/4"	WD	-	-	-	16	I	HM	49	-	50	-	
132	F	1	3' - 6"	6' - 8"	0' - 1 3/4"	WD	C45		-	6	EX	EX	-	-	-	-	NEW DOOR IN EXIST. FRAME; NEW FIN. & HDW. PER SCHED. - FLIP DOOR SWING OUT
133	FG	2	6' - 0 1/2"	7' - 0"	0' - 1 3/4"	AL	-	-	B	AL-2	XVI	AL	8/12	-	11	9	CURTAINWALL DOOR; EXTERIOR; SECURITY CARD READER
134	F	1	3' - 0"	7' - 0"	0' - 1 3/4"	WD	-	-	-	14	II	HM	51	-	52	-	NEW DOOR AND FRAME IN EXIST WALL
135	F	1	3' - 0"	7' - 0"	0' - 1 3/4"	WD	-	-	-	18	II	HM	51	-	52	-	NEW DOOR AND FRAME IN EXIST WALL
136	F	1	3' - 0"	7' - 0"	0' - 1 3/4"	WD	-	-	-	16	I	HM	49	-	50	-	
137	NL	1	3' - 0"	7' - 0"	0' - 1 3/4"	WD	-	-	A	11	I	HM	49	-	50	-	SECURITY CARD READER
139	F	1	3' - 0"	7' - 0"	0' - 1 3/4"	WD	-	-	-	18	I	HM	49	-	50	-	
141A	NLR	1	3' - 0"	7' - 0"	0' - 1 3/4"	WD	C45	-	D	7	II	HM	51	-	52	-	NEW DOOR AND FRAME IN EXISTING OPENING
141B	NLR	1	3' - 0"	7' - 0"	0' - 1 3/4"	WD	C45	-	D	7	II	HM	51	-	52	-	NEW DOOR AND FRAME IN EXISTING OPENING
141C	NLR	1	3' - 0"	7' - 0"	0' - 1 3/4"	WD	C45	-	D	7	II	HM	51	-	52	-	NEW DOOR AND FRAME IN EXISTING OPENING
141D	NLR	1	3' - 0"	7' - 0"	0' - 1 3/4"	WD	C45	-	D	7	II	HM	51	-	52	-	NEW DOOR AND FRAME IN EXISTING OPENING
142	F	1	3' - 0"	7' - 0"	0' - 1 3/4"	WD	-	-	-	11	VI	HM	49/70	71	50/72/73	-	SECURITY CARD READER
143	F	1	3' - 0"	7' - 0"	0' - 1 3/4"	WD	-			19	I	HM	49	-	50	-	
144	HG	1	4' - 0"	7' - 0"	0' - 1 3/4"	HM	-	-	B	2	V	HM	51/66	71	52/67/73	68/69	
145A	F	1	3' - 0"	7' - 0"	0' - 1 3/4"	WD	-	-	-	20	XI	HM	49/70	71	73/88/89	-	
145B	F	1	3' - 0"	7' - 0"	0' - 1 3/4"	WD	-	-	-	12	XI	HM	49/70	71	73/88/89	-	SECURITY CARD READER
146	F	1	3' - 0"	7' - 0"	0' - 1 3/4"	WD	-	-	-	11	I	HM	49	-	50	-	SECURITY CARD READER
148	F	1	3' - 0"	7' - 0"	0' - 1 3/4"	HM	-	-	-	3	EX	EX	-	-	-	-	NEW DOOR IN EXISTING FRAME; REFURBISH DOOR TO NEW CONDITION; REPLACE TOP GLAZED PANEL WITH SOLID TO MATCH
150	F	1	3' - 0"	7' - 0"	0' - 1 3/4"	WD	-	-	-	16	I	HM	49	-	50	-	
151	F	1	3' - 0"	7' - 0"	0' - 1 3/4"	WD	-	-	-	21	I	HM	49	-	50	-	SOUND SILLS ON DOOR - SECURITY CARD READER
153	F	1	3' - 0"	7' - 0"	0' - 1 3/4"	WD	-	-	-	16	VI	HM	49/70	71	50/72/73	-	
154	F	1	3' - 0"	7' - 0"	0' - 1 3/4"	WD	-	-	-	16	VI	HM	49/70	71	50/72/73	-	
155	F	1	3' - 0"	7' - 0"	0' - 1 3/4"	WD	-	-	-	16	VI	HM	49/70	71	50/72/73	-	
156	F	1	3' - 0"	7' - 0"	0' - 1 3/4"	WD	-	-	-	16	VI	HM	49/70	71	50/72/73	-	
157	F	1	3' - 0"	7' - 0"	0' - 1 3/4"	WD	-	-	-	16	VI	HM	49/70	71	50/72/73	-	
158	F	1	3' - 0"	7' - 0"	0' - 1 3/4"	WD	-	-	-	14	I	HM	49	-	50	-	
159	F	1	3' - 0"	7' - 0"	0' - 1 3/4"	WD	-	-	-	13	I	HM	49	-	50	-	

DOOR SCHEDULE - SECOND FLOOR

DOOR NO.	TYPE	NO. LEAFS	OPENING SIZE W	OPENING SIZE H	THICKNESS	MATERIAL	LABEL	UNDER CUT	GLASS TYPE	HARDWARE	FRAME TYPE	FRAME MATERIAL	DETAIL HEAD	DETAIL TRANS.	DETAIL JAMB	DETAIL SILL	REMARKS
203	NLR	2	6' - 0"	7' - 0"	0' - 1 3/4"	WD	B90	-	E	5	XII	HM	93	-	60	-	FAIL-SAFE HOLD OPEN DOOR HARDWARE
205	F	2	7' - 0"	7' - 0"	0' - 1 3/4"	WD	C45			5	IV	HM	53	-	54	-	FAIL-SAFE HOLD OPEN DOOR
206	F	1	3' - 0"	7' - 0"	0' - 1 3/4"	WD	-	-	-	13	I	HM	49	-	50	-	
207	F	1	3' - 0"	7' - 0"	0' - 1 3/4"	WD	-	-	-	14	I	HM	49	-	50	-	
208	F	1	3' - 0"	7' - 0"	0' - 1 3/4"	WD	-	-	-	15	I	HM	49	-	50	-	
211	F	1	3' - 0"	7' - 0"	0' - 1 3/4"	WD	-	-	-	16	VI	HM	49/70	71	50/72/73	-	
212	F	1	3' - 0"	7' - 0"	0' - 1 3/4"	WD	-	-	-	16	VI	HM	49/70	71	50/72/73	-	
213	F	1	3' - 0"	7' - 0"	0' - 1 3/4"	WD	-	-	-	16	VI	HM	49/70	71	50/72/73	-	
214	F	1	3' - 0"	7' - 0"	0' - 1 3/4"	WD	-	-	-	22	VII	HM	49/70	71	56/72/73	-	
215	F	1	3' - 0"	7' - 0"	0' - 1 3/4"	WD	-	-	-	16	VI	HM	49/70	71	50/72/73	-	
216	F	1	3' - 0"	7' - 0"	0' - 1 3/4"	WD	-	-	-	16	VI	HM	49/70	71	50/72/73	-	
217	F	1	3' - 0"	7' - 0"	0' - 1 3/4"	WD	-	-	-	16	VI	HM	49/70	71	50/72/73	-	
219	P	2	5' - 11 3/8"	7' - 0 1/8"	0' - 1 3/4"	HM	-	-	B	4	XX	HM	4/A2.10	-	5/A2.10	-	NEW DOOR AND FRAME IN EXISTING OPENING - FIELD VERIFY SIZE OF OPENING
221	NL	2	6' - 0"	7' - 0"	0' - 1 3/4"	WD	-	-	A	23	IV	HM	49	-	55	-	
223A	NL	1	3' - 0"	7' - 0"	0' - 1 3/4"	WD	C45	-	D	7	II	HM	51	-	52	-	
223B	NL	1	3' - 0"	7' - 0"	0' - 1 3/4"	WD	C45	-	D	7	II	HM	51	-	52	-	
226	F	1	3' - 0"	7' - 0"	0' - 1 3/4"	WD	B60	-	-	8	I	HM	49	-	50	-	
227	F	1	3' - 0"	7' - 0"	0' - 1 3/4"	WD	-	-	-	16	VI	HM	49/70	71	50/72/73	-	
228	F	1	3' - 0"	7' - 0"	0' - 1 3/4"	WD	-	-	-	16	VI	HM	49/70	71	50/72/73	-	
229	F	1	3' - 0"	7' - 0"	0' - 1 3/4"	WD	-	-	-	16	VI	HM	49/70	71	50/72/73	-	
232	FG	1	3' - 8 1/4"	7' - 2"	0' - 1 3/4"	AL	-	-	B	AL-6	XVII	AL	57/58	-	59	90	DOOR IN EXIST MASONRY OPG; V.I.F. ALL DIMENSIONS
233	NLR	1	4' - 0"	7' - 0"	0' - 1 3/4"	WD	B60	-	D	8	III	HM	63	-	64/65	-	
235	F	1	3' - 0"	7' - 0"	0' - 1 3/4"	WD	-	-	-	16	I	HM	49	-	50	-	
236	FG	1	3' - 0"	7' - 0"	0' - 1 3/4"	WD	-	-	A	16	I	HM	49	-	50	-	
237	FG	1	3' - 0"	7' - 0"	0' - 1 3/4"	WD	-	-	A	16	I	HM	49	-	50	-	
238	F	1	3' - 0"	7' - 0"	0' - 1 3/4"	WD	-	-	-	18	I	HM	49	-	50	-	
239A	FG	1	3' - 0"	7' - 0"	0' - 1 3/4"	WD	-	-	A	24	I	HM	49	-	50	-	
239B	FG	1	3' - 0"	7' - 0"	0' - 1 3/4"	WD	-	-	A	24	I	HM	49	-	50	-	
241A	F	1	3' - 1"	7' - 0"	0' - 1 3/4"	WD	-	-	-	AL-8	XIV	AL	48/85	71	31/47/79	-	
241B	F	1	2' - 11 5/8"	7' - 0"	0' - 1 3/4"	WD	-	-	-	AL-8	XIII	AL	48/85	71	31/47/79	-	
241C	F	1	2' - 11 5/8"	7' - 0"	0' - 1 3/4"	WD	-	-	-	AL-8	XIII	AL	48/85	71	31/47/79	-	
243A	F	1	2' - 11 19/32"	7' - 0"	0' - 1 3/4"	WD	-	-	-	AL-9	XIII	AL	48/85	71	31/47/79	-	
243B	F	1	2' - 11 5/8"	7' - 0"	0' - 1 3/4"	WD	-	-	-	AL-10	XIII	AL	48/85	71	31/47/79	-	SECURITY CARD READER
244	F	1	3' - 0"	7' - 0"	0' - 1 3/4"	WD	-	-	-	19	I	HM	49	-	50	-	
245A	F	1	2' - 10 7/8"	7' - 0"	0' - 1 3/4"	WD	-	-	-	AL-9	XIII	AL	48/85	71	31/47/79	-	
245B	F	1	2' - 11 5/8"	7' - 0"	0' - 1 3/4"	WD	-	-	-	AL-10	XIII	AL	48/85	71	31/47/79	-	SECURITY CARD READER
246	F	1	3' - 0"	7' - 0"	0' - 1 3/4"	WD	-	-	-	18	I	HM	49	-	50	-	
248	F	1	3' - 0"	7' - 0"	0' - 1 3/4"	WD	-	-	-	16	VI	HM	49/70	71	50/72/73	-	
249	F	1	3' - 0"	7' - 0"	0' - 1 3/4"	WD	-	-	-	16	VI	HM	49/70	71	50/72/73	-	
250	F	1	3' - 0"	7' - 0"	0' - 1 3/4"	WD	-	-	-	16	I	HM	49	-	50	-	
251	F	1	3' - 0"	7' - 0"	0' - 1 3/4"	WD	-	-	-	16	VI	HM	49/70	71	50/72/73	-	
252	F	1	3' - 0"	7' - 0"	0' - 1 3/4"	WD	-	-	-	16	VI	HM	49/70	71	50/72/73	-	
253A	F	1	3' - 0"	7' - 0"	0' - 1 3/4"	WD	-	-	-	12	VI	HM	49/70	71	50/72/73	-	SECURITY CARD READER
253B	F	1	3' - 0"	7' - 0"	0' - 1 3/4"	WD	-	-	-	20	VII	HM	49/70	71	56/72/73	-	
253C	F	2	6' - 0"	7' - 0"	0' - 1 3/4"	WD	-	-	-	26	IV	HM	49	-	55	-	
255	NL	2	6' - 0"	7' - 0"	0' - 1 3/4"	WD			A	23	IV	HM	49		50		
256	P	2	6' - 0"	7' - 0"	0' - 1 3/4"	HM	-	-	B	4	XX	HM	4/A2.10	-	5/A2.10	-	NEW DOOR AND FRAME IN EXISTING OPENING - FIELD VERIFY SIZE OF OPENING
260A	F	1	3' - 0"	7' - 0"	0' - 1 3/4"	WD	-	-	-	11	VI	HM	49/70	71	50/72/73	-	SECURITY CARD READER
260B	F	1	3' - 0"	7' - 0"	0' - 1 3/4"	WD	-	-	-	11	I	HM	49	-	50	-	SECURITY CARD READER
261	F	1	3' - 0"	7' - 0"	0' - 1 3/4"	WD	-	-	-	16	VI	HM	49/70	71	50/72/73	-	
262	F	1	3' - 0"	7' - 0"	0' - 1 3/4"	WD	-	-	-	16	VI	HM	49/70	71	50/72/73	-	
263	F	1	3' - 0"	7' - 0"	0' - 1 3/4"	WD	-	-	-	16	VI	HM	49/70	71	50/72/73	-	
264	F	1	3' - 0"	7' - 0"	0' - 1 3/4"	WD	-	-	-	16	VI	HM	49/70	71	50/72/73	-	
265	FG	1	3' - 0"	7' - 0"	0' - 1 3/4"	WD	-	-	A	16	X	HM	49/70	71	50/72/73	-	
266	F	1	3' - 0"	7' - 0"	0' - 1 3/4"	WD	-	-	-	16	VI	HM	49/70	71	50/72/73	-	
267	F	1	3' - 0"	7' - 0"	0' - 1 3/4"	WD	-	-	-	16	VI	HM	49/70	71	50/72/73	-	
269	F	1	3' - 0"	7' - 0"	0' - 1 3/4"	WD	-	-	-	13	I	HM	49	-	50	-	

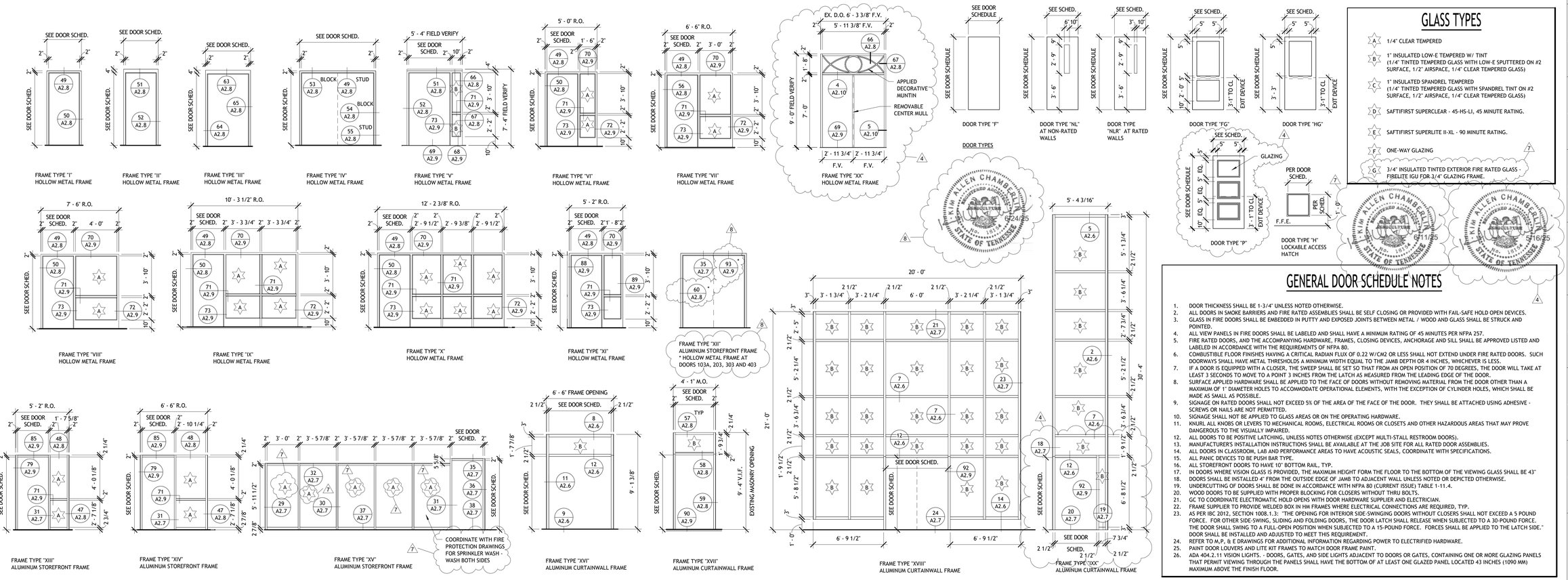

GLASS TYPES

- A — 1/4" CLEAR TEMPERED
- B — 1" INSULATED LOW-E TEMPERED W/ TINT (1/4" TINTED TEMPERED GLASS WITH LOW-E SPUTTERED ON #2 SURFACE, 1/2" AIRSPACE, 1/4" CLEAR TEMPERED GLASS)
- C — 1" INSULATED SPANDREL TEMPERED (1/4" TINTED TEMPERED GLASS WITH SPANDREL TINT ON #2 SURFACE, 1/2" AIRSPACE, 1/4" CLEAR TEMPERED GLASS)
- D — SAFTIFIRST SUPERCLEAR - 45-HS-LI, 45 MINUTE RATING.
- E — SAFTIFIRST SUPERLITE II-XL - 90 MINUTE RATING.
- F — ONE-WAY GLAZING
- G — 3/4" INSULATED TINTED EXTERIOR FIRE RATED GLASS - FIRELITE IGU FOR 3/4" GLAZING FRAME.

GENERAL DOOR SCHEDULE NOTES

1. DOOR THICKNESS SHALL BE 1-3/4" UNLESS NOTED OTHERWISE.
2. ALL DOORS IN SMOKE BARRIERS AND FIRE RATED ASSEMBLIES SHALL BE SELF CLOSING OR PROVIDED WITH FAIL-SAFE HOLD OPEN DEVICES.
3. GLASS IN FIRE DOORS SHALL BE EMBEDDED IN PUTTY AND EXPOSED JOINTS BETWEEN METAL / WOOD AND GLASS SHALL BE STRUCK AND POINTED.
4. ALL VIEW PANELS IN FIRE DOORS SHALL BE LABELED AND SHALL HAVE A MINIMUM RATING OF 45 MINUTES PER NFPA 257.
5. FIRE RATED DOORS, AND THE ACCOMPANYING HARDWARE, FRAMES, CLOSING DEVICES, ANCHORAGE AND SILL SHALL BE APPROVED LISTED AND LABELED IN ACCORDANCE WITH THE REQUIREMENTS OF NFPA 80.
6. COMBUSTIBLE FLOOR FINISHES HAVING A CRITICAL RADIAN FLUX OF 0.22 W/CM2 OR LESS SHALL NOT EXTEND UNDER FIRE RATED DOORS. SUCH DOORWAYS SHALL HAVE METAL THRESHOLDS A MINIMUM WIDTH EQUAL TO THE JAMB DEPTH OR 4 INCHES, WHICHEVER IS LESS.
7. IF A DOOR IS EQUIPPED WITH A CLOSER, THE SWEEP SHALL BE SET SO THAT FROM AN OPEN POSITION OF 70 DEGREES, THE DOOR WILL TAKE AT LEAST 3 SECONDS TO MOVE TO A POINT 3 INCHES FROM THE LATCH AS MEASURED FROM THE LEADING EDGE OF THE DOOR.
8. SURFACE APPLIED HARDWARE SHALL BE APPLIED TO THE FACE OF DOORS WITHOUT REMOVING MATERIAL FROM THE DOOR OTHER THAN A MAXIMUM OF 1" DIAMETER HOLES TO ACCOMMODATE OPERATIONAL ELEMENTS, WITH THE EXCEPTION OF CYLINDER HOLES, WHICH SHALL BE MADE AS SMALL AS POSSIBLE.
9. SIGNAGE ON RATED DOORS SHALL NOT EXCEED 5% OF THE AREA OF THE FACE OF THE DOOR. THEY SHALL BE ATTACHED USING ADHESIVE - SCREWS OR NAILS ARE NOT PERMITTED.
10. SIGNAGE SHALL NOT BE APPLIED TO GLASS AREAS OR ON THE OPERATING HARDWARE.
11. KNURL ALL KNOBS OR LEVERS TO MECHANICAL ROOMS, ELECTRICAL ROOMS OR CLOSETS AND OTHER HAZARDOUS AREAS THAT MAY PROVE DANGEROUS TO THE VISUALLY IMPAIRED.
12. ALL DOORS TO BE POSITIVE LATCHING, UNLESS NOTES OTHERWISE (EXCEPT MULTI-STALL RESTROOM DOORS).
13. MANUFACTURER'S INSTALLATION INSTRUCTIONS SHALL BE AVAILABLE AT THE JOB SITE FOR ALL RATED DOOR ASSEMBLIES.
14. ALL DOORS IN CLASSROOM, LAB AND PERFORMANCE AREAS TO HAVE ACOUSTIC SEALS, COORDINATE WITH SPECIFICATIONS.
15. ALL PANIC DEVICES TO BE PUSH BAR TYPE.
16. ALL STOREFRONT DOORS TO HAVE 10" BOTTOM RAIL, TYP.
17. IN DOORS WHERE VISION GLASS IS PROVIDED, THE MAXIMUM HEIGHT FORM THE FLOOR TO THE BOTTOM OF THE VIEWING GLASS SHALL BE 43"
18. DOORS SHALL BE INSTALLED 4" FROM THE OUTSIDE EDGE OF JAMB TO ADJACENT WALL UNLESS NOTED OR DEPICTED OTHERWISE.
19. UNDERCUTTING OF DOORS SHALL BE DONE IN ACCORDANCE WITH NFPA 80 (CURRENT ISSUE) TABLE 1-11.4.
20. WOOD DOORS TO BE SUPPLIED WITH PROPER BLOCKING FOR CLOSERS WITHOUT THRU BOLTS.
21. GC TO COORDINATE ELECTROMATIC HOLD OPENS WITH DOOR HARDWARE SUPPLIER AND ELECTRICIAN.
22. FRAME SUPPLIER TO PROVIDE WELDED BOX IN HM FRAMES WHERE ELECTRICAL CONNECTIONS ARE REQUIRED, TYP.
23. AS PER IBC 2012, SECTION 1008.1.3: "THE OPENING FOR INTERIOR SIDE-SWINGING DOORS WITHOUT CLOSERS SHALL NOT EXCEED A 5 POUND FORCE. FOR OTHER SIDE-SWING, SLIDING AND FOLDING DOORS, THE DOOR LATCH SHALL RELEASE WHEN SUBJECTED TO A 30-POUND FORCE. THE DOOR SHALL SWING TO A FULL-OPEN POSITION WHEN SUBJECTED TO A 15-POUND FORCE. FORCES SHALL BE APPLIED TO THE LATCH SIDE." DOOR SHALL BE INSTALLED AND ADJUSTED TO MEET THIS REQUIREMENT.
24. REFER TO M,P, & E DRAWINGS FOR ADDITIONAL INFORMATION REGARDING POWER TO ELECTRIFIED HARDWARE.
25. PAINT DOOR LOUVERS AND LITE KIT FRAMES TO MATCH DOOR FRAME PAINT.
26. ADA 404.2.11 VISION LIGHTS. - DOORS, GATES, AND SIDE LIGHTS ADJACENT TO DOORS OR GATES, CONTAINING ONE OR MORE GLAZING PANELS THAT PERMIT VIEWING THROUGH THE PANELS SHALL HAVE THE BOTTOM OF AT LEAST ONE GLAZED PANEL LOCATED 43 INCHES (1090 MM) MAXIMUM ABOVE THE FINISH FLOOR.

COMMUNITY TECTONICS ARCHITECTS
7610 Gleason Road, Knoxville, TN 37919
Ph. (865) 637-0890 www.communitytectonics.com

Upland Design Group
P.O. Box 1026, Crossville, TN 38557
Ph. (931) 484-7541 www.uplanddesigngroup.com

W&O Construction
150 Construction Drive, Livingston, TN 38570
Ph. (931) 403-1000 www.wocc.com

PROJECT
JOHNSON HALL RENOVATION - PKG 3
JOHNSON HALL RENOVATION & FOSTER DEMOLITION
SBC Nº 364/011-04-2022CM

LOCATION: COOKEVILLE, TN

OWNER: TENNESSEE TECH. UNIVERSITY

SEAL: KIM ALLEN CHAMBERLIN — REGISTERED ARCHITECT — AGRICULTURE — NO. 18134 — STATE OF TENNESSEE — 3/28/25

NO.	DESCRIPTION	DATE
4	Addendum 1 - PKG 3	5-16-25
7	Addendum 3 - PKG 3	6-11-25
8	Addendum 5 - PKG 3	6-24-25

JOB NO. 22025

ISSUE DATE 3-28-25

SHEET TITLE
DOOR SCHEDULE - 1ST AND 2ND FLOOR

DRAWN CWD

REVIEW KAC

A2.3

DOOR SCHEDULE - THIRD FLOOR

DOOR NO.	TYPE	NO. LEAFS	OPENING SIZE W	OPENING SIZE H	THICKNESS	MATERIAL	LABEL	UNDER CUT	GLASS TYPE	HARDWARE	FRAME TYPE	FRAME MATERIAL	DETAIL HEAD	DETAIL TRANS.	DETAIL JAMB	DETAIL SILL	REMARKS (8)
303	NLR	2	6' - 0"	7' - 0"	0' - 1 3/4"	WD	B90	-	E	5	XII	HM	93	-	60	-	FAIL-SAFE HOLD OPEN DOOR HARDWARE
305	F	2	7' - 0"	7' - 0"	0' - 1 3/4"	WD	C45	-	-	5	IV	HM	53	-	54	-	FAIL-SAFE HOLD OPEN DOOR
306	F	1	3' - 0"	7' - 0"	0' - 1 3/4"	WD	-	-	-	13	I	HM	49	-	50	-	
307	F	1	3' - 0"	7' - 0"	0' - 1 3/4"	WD	-	-	-	14	I	HM	49	-	50	-	
308	F	1	3' - 0"	7' - 0"	0' - 1 3/4"	WD	-	-	-	15	I	HM	49	-	50	-	
311	F	1	3' - 0"	7' - 0"	0' - 1 3/4"	WD	-	-	-	16	VI	HM	49/70	71	50/72/73	-	
312	F	1	3' - 0"	7' - 0"	0' - 1 3/4"	WD	-	-	-	16	VI	HM	49/70	71	50/72/73	-	
313	F	1	3' - 0"	7' - 0"	0' - 1 3/4"	WD	-	-	-	16	VI	HM	49/70	71	50/72/73	-	
314	F	1	3' - 0"	7' - 0"	0' - 1 3/4"	WD	-	-	-	22	VI	HM	49/70	71	50/72/73	-	
315A	F	1	3' - 0"	7' - 0"	0' - 1 3/4"	WD	-	-	-	20	VI	HM	49/70	71	50/72/73	-	
315B	F	1	3' - 0"	7' - 0"	0' - 1 3/4"	WD	-	-	-	20	VI	HM	49/70	71	50/72/73	-	
317	F	1	3' - 0"	7' - 0"	0' - 1 3/4"	WD	-	-	-	22	VI	HM	49/70	71	50/72/73	-	
318	F	1	3' - 0"	7' - 0"	0' - 1 3/4"	WD	-	-	-	16	VI	HM	49/70	71	50/72/73	-	
319	F	1	3' - 0"	7' - 0"	0' - 1 3/4"	WD	-	-	-	16	VI	HM	49/70	71	50/72/73	-	
321	F	1	3' - 0"	7' - 0"	0' - 1 3/4"	WD	-	-	-	16	VI	HM	49/70	71	50/72/73	-	
322	F	1	3' - 0"	7' - 0"	0' - 1 3/4"	WD	-	-	-	16	VI	HM	49/70	71	50/72/73	-	
323	FG	1	3' - 0"	7' - 0"	0' - 1 3/4"	WD	-	-	A	16	IX	HM	49/70	71	50/72/73	-	
325	FG	1	3' - 8 1/4"	7' - 2"	0' - 1 3/4"	AL	-	-	B	AL-6	XVII	AL	57/58	-	59	90	DOOR IN EXIST MASONRY OPG; V.I.F. ALL DIMENSIONS
326	NLR	1	4' - 0"	7' - 0"	0' - 1 3/4"	WD	B-60	-	D	8	III	HM	63	-	64/65	-	
328	F	1	3' - 0"	7' - 0"	0' - 1 3/4"	WD	-	-	-	16	I	HM	49	-	50	-	
329	F	1	3' - 0"	7' - 0"	0' - 1 3/4"	WD	-	-	-	16	VI	HM	49/70	71	50/72/73	-	
331	F	1	3' - 0"	7' - 0"	0' - 1 3/4"	WD	-	-	-	16	VI	HM	49/70	71	50/72/73	-	
332	F	1	3' - 0"	7' - 0"	0' - 1 3/4"	WD	-	-	-	16	VI	HM	49/70	71	50/72/73	-	
333	F	1	3' - 0"	7' - 0"	0' - 1 3/4"	WD	-	-	-	18	I	HM	49	-	50	-	
334	F	1	3' - 0"	7' - 0"	0' - 1 3/4"	WD	-	-	-	11	VI	HM	49/70	71	50/72/73	-	SECURITY CARD READER
335A	F	1	3' - 0"	7' - 0"	0' - 1 3/4"	WD	-	-	-	16	VI	HM	49/70	71	50/72/73	-	
335B	F	1	3' - 0"	7' - 0"	0' - 1 3/4"	WD	-	-	-	16	I	HM	49	-	50	-	
336	F	1	3' - 0"	7' - 0"	0' - 1 3/4"	WD	-	-	-	16	VI	HM	49/70	71	50/72/73	-	
337	F	1	3' - 0"	7' - 0"	0' - 1 3/4"	WD	-	-	-	16	VI	HM	49/70	71	50/72/73	-	
338	F	1	3' - 0"	7' - 0"	0' - 1 3/4"	WD	-	-	-	25	I	HM	49	-	50	-	
339	F	1	3' - 0"	7' - 0"	0' - 1 3/4"	WD	-	-	-	25	I	HM	49	-	50	-	
341	F	1	3' - 0"	7' - 0"	0' - 1 3/4"	WD	-	-	-	25	I	HM	49	-	50	-	
342A	F	1	3' - 0"	7' - 0"	0' - 1 3/4"	WD	-	-	-	20	VI	HM	49/70	71	50/72/73	-	
342B	F	1	3' - 0"	7' - 0"	0' - 1 3/4"	WD	-	-	-	20	VI	HM	49/70	71	50/72/73	-	
343	F	1	3' - 0"	7' - 0"	0' - 1 3/4"	WD	-	-	-	16	I	HM	49	-	50	-	
344	F	1	3' - 0"	7' - 0"	0' - 1 3/4"	WD	-	-	-	19	I	HM	49	-	50	-	
345	F	1	3' - 0"	7' - 0"	0' - 1 3/4"	WD	-	-	-	16	VI	HM	49/70	71	50/72/73	-	
346	F	1	3' - 0"	7' - 0"	0' - 1 3/4"	WD	-	-	-	16	VI	HM	49/70	71	50/72/73	-	
347	F	1	3' - 0"	7' - 0"	0' - 1 3/4"	WD	-	-	-	18	I	HM	49	-	50	-	
349	FG	1	3' - 0"	7' - 0"	0' - 1 3/4"	WD	-	-	A	16	IX	HM	49/70	71	50/72/73	-	
351	F	1	3' - 0"	7' - 0"	0' - 1 3/4"	WD	-	-	-	16	VI	HM	49/70	71	50/72/73	-	
352	F	1	3' - 0"	7' - 0"	0' - 1 3/4"	WD	-	-	-	16	VI	HM	49/70	71	50/72/73	-	
353	F	1	3' - 0"	7' - 0"	0' - 1 3/4"	WD	-	-	-	16	VI	HM	49/70	71	50/72/73	-	
354A	F	1	3' - 0"	7' - 0"	0' - 1 3/4"	WD	-	-	-	16	VI	HM	49/70	71	50/72/73	-	
354B	F	1	3' - 0"	7' - 0"	0' - 1 3/4"	WD	-	-	-	16	I	HM	49	-	50	-	
356	F	1	3' - 0"	7' - 0"	0' - 1 3/4"	WD	-	-	-	16	I	HM	49	-	50	-	
358	F	1	3' - 0"	7' - 0"	0' - 1 3/4"	WD	-	-	-	16	VI	HM	49/70	71	50/72/73	-	
362	F	1	3' - 0"	7' - 0"	0' - 1 3/4"	WD	-	-	-	17	VI	HM	49/70	71	50/72/73	-	
364	F	1	3' - 0"	7' - 0"	0' - 1 3/4"	WD	-	-	-	16	VI	HM	49/70	71	50/72/73	-	
368	F	1	3' - 0"	7' - 0"	0' - 1 3/4"	WD	-	-	-	16	VI	HM	49/70	71	50/72/73	-	
371	F	1	3' - 0"	7' - 0"	0' - 1 3/4"	WD	-	-	-	17	VII	HM	49/70	71	56/72/73	-	
372	F	1	3' - 0"	7' - 0"	0' - 1 3/4"	WD	-	-	-	16	VI	HM	49/70	71	50/72/73	-	
373	F	1	3' - 0"	7' - 0"	0' - 1 3/4"	WD	-	-	-	16	VI	HM	49/70	71	50/72/73	-	
374	F	1	3' - 0"	7' - 0"	0' - 1 3/4"	WD	-	-	-	16	I	HM	49	-	50	-	
375A	F	1	3' - 0"	7' - 0"	0' - 1 3/4"	WD	-	-	-	16	VI	HM	49/70	71	50/72/73	-	
375B	F	1	3' - 0"	7' - 0"	0' - 1 3/4"	WD	-	-	-	16	I	HM	49	-	50	-	
376	F	1	3' - 0"	7' - 0"	0' - 1 3/4"	WD	-	-	-	16	VI	HM	49/70	71	50/72/73	-	
377	F	1	3' - 0"	7' - 0"	0' - 1 3/4"	WD	-	-	-	16	VI	HM	49/70	71	50/72/73	-	
379	F	1	3' - 0"	7' - 0"	0' - 1 3/4"	WD	-	-	-	16	I	HM	49	-	50	-	
381	F	1	3' - 0"	7' - 0"	0' - 1 3/4"	WD	-	-	-	13	I	HM	49	-	50	-	

DOOR SCHEDULE - FOURTH FLOOR

DOOR NO.	TYPE	NO. LEAFS	OPENING SIZE W	OPENING SIZE H	THICKNESS	MATERIAL	LABEL	UNDER CUT	GLASS TYPE	HARDWARE	FRAME TYPE	FRAME MATERIAL	DETAIL HEAD	DETAIL TRANS.	DETAIL JAMB	DETAIL SILL	REMARKS (8)
403	NLR	2	6' - 0"	7' - 0"	0' - 1 3/4"	WD	B90	-	E	5	XII	HM	93	-	60	-	FAIL-SAFE HOLD OPEN DOOR HARDWARE
404A	F	1	4' - 0"	7' - 0"	0' - 1 3/4"	WD	C45	-	-	9	I	HM	49	-	50	-	
404B	F	1	4' - 0"	7' - 0"	0' - 1 3/4"	WD	C45	-	-	9	I	HM	49	-	50	-	
404C	F	1	4' - 0"	7' - 0"	0' - 1 3/4"	WD	B90	-	-	9	I	HM	49	-	50	-	
406	F	2	6' - 0"	7' - 0"	0' - 1 3/4"	WD	C45	-	-	5	IV	HM	49	-	55	-	FAIL-SAFE HOLD OPEN DOOR
407	F	1	3' - 0"	7' - 0"	0' - 1 3/4"	WD	-	-	-	14	I	HM	49	-	50	-	
408	F	1	3' - 0"	7' - 0"	0' - 1 3/4"	WD	-	-	-	14	I	HM	49	-	50	-	
409	F	1	3' - 0"	7' - 0"	0' - 1 3/4"	WD	-	-	-	15	I	HM	49	-	50	-	
413A	F	1	3' - 0"	7' - 0"	0' - 1 3/4"	WD	-	-	-	16	VI	HM	49/70	71	50/72/73	-	
413B	H	1	2' - 0"	2' - 0"	0' - 1 1/2"	-	-	-	-	AL-7	PER MANUF.	-	-	-	-	-	LOCKABLE ACCESS HATCH
413C	H	1	2' - 0"	2' - 0"	0' - 1 1/2"	-	-	-	-	AL-7	PER MANUF.	-	-	-	-	-	LOCKABLE ACCESS HATCH
414A	F	1	3' - 0"	7' - 0"	0' - 1 3/4"	WD	-	-	-	17	VI	HM	49/70	71	50/72/73	-	
414B	H	1	2' - 0"	2' - 0"	0' - 1 1/2"	-	-	-	-	AL-7	PER MANUF.	-	-	-	-	-	
415	F	1	3' - 0"	7' - 0"	0' - 1 3/4"	WD	-	-	-	16	VI	HM	49/70	71	50/72/73	-	
416	F	1	3' - 0"	7' - 0"	0' - 1 3/4"	WD	-	-	-	16	VI	HM	49/70	71	50/72/73	-	
417	F	1	3' - 0"	7' - 0"	0' - 1 3/4"	WD	-	-	-	16	VI	HM	49/70	71	50/72/73	-	
418	F	1	3' - 0"	7' - 0"	0' - 1 3/4"	WD	-	-	-	22	VI	HM	49/70	71	50/72/73	-	
421A	F	1	3' - 0"	7' - 0"	0' - 1 3/4"	WD	-	-	-	22	VI	HM	49/70	71	50/72/73	-	
421B	H	1	2' - 0"	2' - 0"	0' - 1 1/2"	-	-	-	-	AL-7	PER MANUF.	-	-	-	-	-	LOCKABLE ACCESS HATCH
421C	H	1	2' - 0"	2' - 0"	0' - 1 1/2"	-	-	-	-	AL-7	PER MANUF.	-	-	-	-	-	LOCKABLE ACCESS HATCH
422A	F	1	3' - 0"	7' - 0"	0' - 1 3/4"	WD	-	-	-	13	II	HM	51	-	52	-	NEW DOOR AND FRAME IN EXISTING OPENING
422B	H	1	2' - 0"	2' - 0"	0' - 1 1/2"	-	-	-	-	AL-7	PER MANUF.	-	-	-	-	-	LOCKABLE ACCESS HATCH
423	F	1	3' - 0"	7' - 0"	0' - 1 3/4"	WD	-	-	-	16	VI	HM	49/70	71	50/72/73	-	
424	F	1	3' - 0"	7' - 0"	0' - 1 3/4"	WD	-	-	-	16	VI	HM	49/70	71	50/72/73	-	
425	F	1	3' - 0"	7' - 0"	0' - 1 3/4"	WD	-	-	-	16	VI	HM	49/70	71	50/72/73	-	
427	FG	1	3' - 8 1/4"	7' - 2"	0' - 1 3/4"	AL	-	-	B	AL-6	XVII	AL	57/58	-	59	90	DOOR IN EXIST MASONRY OPG; V.I.F. ALL DIMENSIONS
428	NLR	1	4' - 0"	7' - 0"	0' - 1 3/4"	WD	B-60	-	D	8	III	HM	63	-	64/65	-	
431	F	1	3' - 0"	7' - 0"	0' - 1 3/4"	WD	-	-	-	18	I	HM	49	-	50	-	
432	F	1	3' - 0"	7' - 0"	0' - 1 3/4"	WD	-	-	-	16	VI	HM	49/70	71	50/72/73	-	
433	F	1	3' - 0"	7' - 0"	0' - 1 3/4"	WD	-	-	-	16	VI	HM	49/70	71	50/72/73	-	
434	F	1	3' - 0"	7' - 0"	0' - 1 3/4"	WD	-	-	-	18	I	HM	49	-	50	-	
435	F	1	3' - 0"	7' - 0"	0' - 1 3/4"	WD	-	-	-	16	VI	HM	49/70	71	50/72/73	-	
436	F	1	3' - 0"	7' - 0"	0' - 1 3/4"	WD	-	-	-	16	VI	HM	49/70	71	50/72/73	-	
437	F	1	3' - 0"	7' - 0"	0' - 1 3/4"	WD	-	-	-	16	VI	HM	49/70	71	50/72/73	-	
438	F	1	3' - 0"	7' - 0"	0' - 1 3/4"	WD	-	-	-	22	VI	HM	49/70	71	50/72/73	-	
441	F	1	3' - 0"	7' - 0"	0' - 1 3/4"	WD	-	-	-	22	VI	HM	49/70	71	50/72/73	-	
442	F	1	3' - 0"	7' - 0"	0' - 1 3/4"	WD	-	-	-	19	II	HM	51	-	52	-	
443	F	1	3' - 0"	7' - 0"	0' - 1 3/4"	WD	-	-	-	11	VI	HM	49/70	71	50/72/73	-	SECURITY CARD READER
444	F	1	3' - 0"	7' - 0"	0' - 1 3/4"	WD	-	-	-	18	I	HM	49	-	50	-	
446	F	1	3' - 0"	7' - 0"	0' - 1 3/4"	WD	-	-	-	16	VI	HM	49/70	71	50/72/73	-	
447	F	1	3' - 0"	7' - 0"	0' - 1 3/4"	WD	-	-	-	16	VI	HM	49/70	71	50/72/73	-	
448A	F	1	3' - 0"	7' - 0"	0' - 1 3/4"	WD	-	-	-	13	II	HM	51	-	52	-	NEW DOOR AND FRAME IN EXISTING OPENING
448B	H	1	2' - 0"	2' - 0"	0' - 1 1/2"	-	-	-	-	AL-7	PER MANUF.	-	-	-	-	-	LOCKABLE ACCESS HATCH
449	NL	1	3' - 0"	7' - 0"	0' - 1 3/4"	WD	-	-	A	22	II	HM	51	-	52	-	NEW DOOR AND FRAME IN EXISTING WALL
449B	H	1	2' - 0"	2' - 0"	0' - 1 1/2"	-	-	-	-	AL-7	PER MANUF.	-	-	-	-	-	LOCKABLE ACCESS HATCH
449C	H	1	2' - 0"	2' - 0"	0' - 1 1/2"	-	-	-	-	AL-7	PER MANUF.	-	-	-	-	-	LOCKABLE ACCESS HATCH
452A	NLR	1	3' - 0"	7' - 0"	0' - 1 3/4"	WD	C-45	-	D	7	II	HM	51	-	52	-	NEW DOOR AND FRAME IN EXISTING WALL
452B	NLR	1	3' - 0"	7' - 0"	0' - 1 3/4"	WD	C-45	-	D	7	II	HM	51	-	52	-	NEW DOOR AND FRAME IN EXISTING WALL
453A	F	1	3' - 0"	7' - 0"	0' - 1 3/4"	WD	C-45	-	-	10	II	HM	51	-	52	-	NEW DOOR AND FRAME IN EXISTING WALL
453B	H	1	2' - 0"	2' - 0"	0' - 1 1/2"	-	-	-	-	AL-7	PER MANUF.	-	-	-	-	-	LOCKABLE ACCESS HATCH
453C	H	1	2' - 0"	2' - 0"	0' - 1 1/2"	-	-	-	-	AL-7	PER MANUF.	-	-	-	-	-	LOCKABLE ACCESS HATCH
454A	F	1	3' - 0"	7' - 0"	0' - 1 3/4"	WD	-	-	-	16	VI	HM	49/70	71	50/72/73	-	
454B	H	1	2' - 0"	2' - 0"	0' - 1 1/2"	-	-	-	-	AL-7	PER MANUF.	-	-	-	-	-	LOCKABLE ACCESS HATCH
455	F	1	3' - 0"	7' - 0"	0' - 1 3/4"	WD	-	-	-	16	VI	HM	49/70	71	50/72/73	-	
456	F	1	3' - 0"	7' - 0"	0' - 1 3/4"	WD	-	-	-	16	I	HM	49	-	50	-	
458	F	1	3' - 0"	7' - 0"	0' - 1 3/4"	WD	-	-	-	14	I	HM	49	-	50	-	
459	F	1	3' - 0"	7' - 0"	0' - 1 3/4"	WD	-	-	-	16	VI	HM	49/70	71	50/72/73	-	
460	F	1	3' - 0"	7' - 0"	0' - 1 3/4"	WD	-	-	-	16	VI	HM	49/70	71	50/72/73	-	
461	F	1	3' - 0"	7' - 0"	0' - 1 3/4"	WD	-	-	-	16	VI	HM	49/70	71	50/72/73	-	
462	F	1	3' - 0"	7' - 0"	0' - 1 3/4"	WD	-	-	-	18	I	HM	49	-	50	-	
463	F	2	6' - 0"	7' - 0"	0' - 1 3/4"	WD	-	-	-	26	IV	HM	49	-	55	-	

4

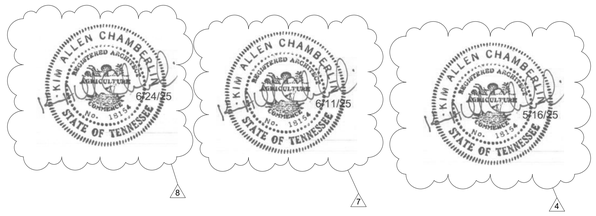

8 7 4

GLASS TYPES

- A — 1/4" CLEAR TEMPERED
- B — 1" INSULATED LOW-E TEMPERED W/ TINT (1/4" TINTED TEMPERED GLASS WITH LOW-E SPUTTERED ON #2 SURFACE, 1/2" AIRSPACE, 1/4" CLEAR TEMPERED GLASS)
- C — 1" INSULATED SPANDREL TEMPERED (1/4" TINTED TEMPERED GLASS WITH SPANDREL TINT ON #2 SURFACE, 1/2" AIRSPACE, 1/4" CLEAR TEMPERED GLASS)
- D — SAFTIFIRST SUPERCLEAR - 45-HS-LI, 45 MINUTE RATING.
- E — SAFTIFIRST SUPERLITE II-XL - 90 MINUTE RATING.
- F — ONE-WAY GLAZING
- G — 3/4" INSULATED TINTED EXTERIOR FIRE RATED GLASS - FIRELITE IGU FOR 3/4" GLAZING FRAME.

7

GENERAL DOOR SCHEDULE NOTES

1. DOOR THICKNESS SHALL BE 1-3/4" UNLESS NOTED OTHERWISE.
2. ALL DOORS IN SMOKE BARRIERS AND FIRE RATED ASSEMBLIES SHALL BE SELF CLOSING OR PROVIDED WITH FAIL-SAFE HOLD OPEN DEVICES.
3. GLASS IN FIRE DOORS SHALL BE EMBEDDED IN PUTTY AND EXPOSED JOINTS BETWEEN METAL / WOOD AND GLASS SHALL BE STRUCK AND POINTED.
4. ALL VIEW PANELS IN FIRE DOORS SHALL BE LABELED AND SHALL HAVE A MINIMUM RATING OF 45 MINUTES PER NFPA 257.
5. FIRE RATED DOORS, AND THE ACCOMPANYING HARDWARE, FRAMES, CLOSING DEVICES, ANCHORAGE AND SILL SHALL BE APPROVED LISTED AND LABELED IN ACCORDANCE WITH THE REQUIREMENTS OF NFPA 80.
6. COMBUSTIBLE FLOOR FINISHES HAVING A CRITICAL RADIAN FLUX OF 0.22 W/CM2 OR LESS SHALL NOT EXTEND UNDER FIRE RATED DOORS. SUCH DOORWAYS SHALL HAVE METAL THRESHOLDS A MINIMUM WIDTH EQUAL TO THE JAMB DEPTH OR 4 INCHES, WHICHEVER IS LESS.
7. IF A DOOR IS EQUIPPED WITH A CLOSER, THE SWEEP SHALL BE SET SO THAT FROM AN OPEN POSITION OF 70 DEGREES, THE DOOR WILL TAKE AT LEAST 3 SECONDS TO MOVE TO A POINT 3 INCHES FROM THE LATCH AS MEASURED FROM THE LEADING EDGE OF THE DOOR.
8. SURFACE APPLIED HARDWARE SHALL BE APPLIED TO THE FACE OF DOORS WITHOUT REMOVING MATERIAL FROM THE DOOR OTHER THAN A MAXIMUM OF 1" DIAMETER HOLES TO ACCOMMODATE OPERATIONAL ELEMENTS, WITH THE EXCEPTION OF CYLINDER HOLES, WHICH SHALL BE MADE AS SMALL AS POSSIBLE.
9. SIGNAGE ON RATED DOORS SHALL NOT EXCEED 5% OF THE AREA OF THE FACE OF THE DOOR. THEY SHALL BE ATTACHED USING ADHESIVE - SCREWS OR NAILS ARE NOT PERMITTED.
10. SIGNAGE SHALL NOT BE APPLIED TO GLASS AREAS OR ON THE OPERATING HARDWARE.
11. KNURL ALL KNOBS OR LEVERS TO MECHANICAL ROOMS, ELECTRICAL ROOMS OR CLOSETS AND OTHER HAZARDOUS AREAS THAT MAY PROVE DANGEROUS TO THE VISUALLY IMPAIRED.
12. ALL DOORS TO BE POSITIVE LATCHING, UNLESS NOTES OTHERWISE (EXCEPT MULTI-STALL RESTROOM DOORS).
13. MANUFACTURER'S INSTALLATION INSTRUCTIONS SHALL BE AVAILABLE AT THE JOB SITE FOR ALL RATED DOOR ASSEMBLIES.
14. ALL DOORS IN CLASSROOM, LAB AND PERFORMANCE AREAS TO HAVE ACOUSTIC SEALS, COORDINATE WITH SPECIFICATIONS.
15. ALL PANIC DEVICES TO BE PUSH BAR TYPE.
16. ALL STOREFRONT DOORS TO HAVE 10" BOTTOM RAIL, TYP.
17. IN DOORS WHERE VISION GLASS IS PROVIDED, THE MAXIMUM HEIGHT FORM THE FLOOR TO THE BOTTOM OF THE VIEWING GLASS SHALL BE 43"
18. DOORS SHALL BE INSTALLED 4" FROM THE OUTSIDE EDGE OF JAMB TO ADJACENT WALL UNLESS NOTED OR DEPICTED OTHERWISE.
19. UNDERCUTTING OF DOORS SHALL BE DONE IN ACCORDANCE WITH NFPA 80 (CURRENT ISSUE) TABLE 1-11.4.
20. WOOD DOORS TO BE SUPPLIED WITH PROPER BLOCKING FOR CLOSERS WITHOUT THRU BOLTS.
21. GC TO COORDINATE ELECTROMATIC HOLD OPENS WITH DOOR HARDWARE SUPPLIER AND ELECTRICIAN.
22. FRAME SUPPLIER TO PROVIDE WELDED BOX IN HM FRAMES WHERE ELECTRICAL CONNECTIONS ARE REQUIRED, TYP.
23. AS PER IBC 2012, SECTION 1008.1.3: "THE OPENING FOR INTERIOR SIDE-SWINGING DOORS WITHOUT CLOSERS SHALL NOT EXCEED A 5 POUND FORCE. FOR OTHER SIDE-SWING, SLIDING AND FOLDING DOORS, THE DOOR LATCH SHALL RELEASE WHEN SUBJECTED TO A 30-POUND FORCE. THE DOOR SHALL SWING TO A FULL-OPEN POSITION WHEN SUBJECTED TO A 15-POUND FORCE. FORCES SHALL BE APPLIED TO THE LATCH SIDE." DOOR SHALL BE INSTALLED AND ADJUSTED TO MEET THIS REQUIREMENT.
24. REFER TO M,P, & E DRAWINGS FOR ADDITIONAL INFORMATION REGARDING POWER TO ELECTRIFIED HARDWARE.
25. PAINT DOOR LOUVERS AND LITE KIT FRAMES TO MATCH DOOR FRAME PAINT.
26. ADA 404.2.11 VISION LIGHTS. - DOORS, GATES, AND SIDE LIGHTS ADJACENT TO DOORS OR GATES, CONTAINING ONE OR MORE GLAZING PANELS THAT PERMIT VIEWING THROUGH THE PANELS SHALL HAVE THE BOTTOM OF AT LEAST ONE GLAZED PANEL LOCATED 43 INCHES (1090 MM) MAXIMUM ABOVE THE FINISH FLOOR.

COMMUNITY TECTONICS ARCHITECTS
7610 Gleason Road, Knoxville, TN 37919
Ph. (865) 637-0890
www.communitytectonics.com

Upland Design Group
P.O. Box 1026, Crossville, TN 38557
Ph. (931) 484-7541
www.uplanddesigngroup.com

W&O Construction
150 Construction Drive, Livingston, TN 38570
Ph. (931) 403-1000
www.wocc.com

PROJECT
JOHNSON HALL RENOVATION - PKG 3
JOHNSON HALL RENOVATION & FOSTER DEMOLITION
SBC Nº 364/011-04-2022CM

OWNER: TENNESSEE TECH. UNIVERSITY
LOCATION: COOKEVILLE, TN

SEAL

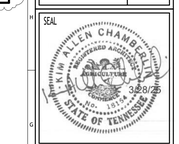

NO.	DESCRIPTION	DATE
4	Addendum 1 - PKG 3	5-16-25
7	Addendum 3 - PKG 3	6-11-25
8	Addendum 5 - PKG 3	6-24-25

JOB NO. 22025

ISSUE DATE 3-28-25

SHEET TITLE: DOOR SCHEDULE - 3RD AND 4TH FLOOR

DRAWN: CWD

REVIEW: KAC

A2.4

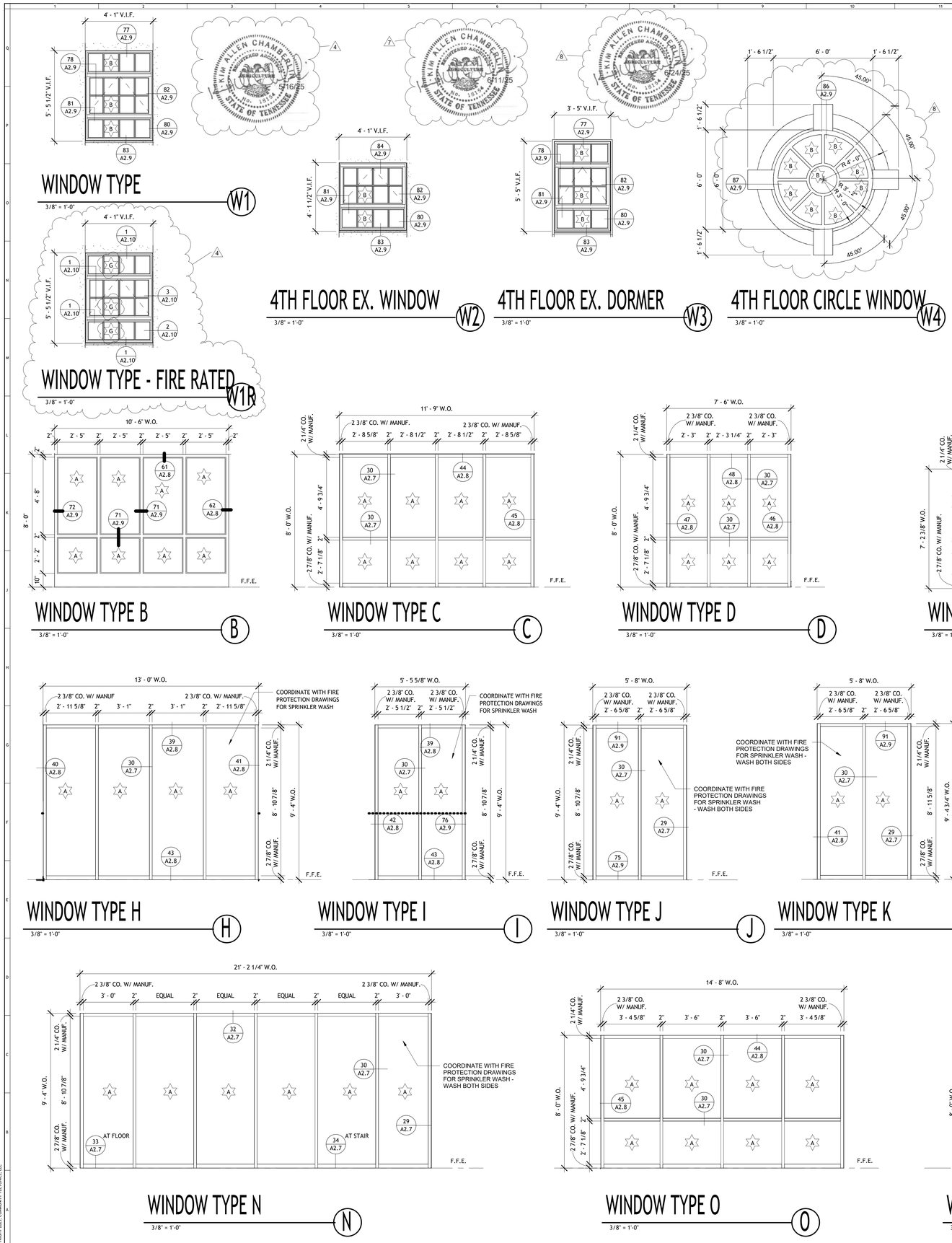

GLASS TYPES

- A — 1/4" CLEAR TEMPERED
- B — 1" INSULATED LOW-E TEMPERED W/ TINT (1/4" TINTED TEMPERED GLASS WITH LOW-E SPUTTERED ON #2 SURFACE, 1/2" AIRSPACE, 1/4" CLEAR TEMPERED GLASS)
- C — 1" INSULATED SPANDREL TEMPERED (1/4" TINTED TEMPERED GLASS WITH SPANDREL TINT ON #2 SURFACE, 1/2" AIRSPACE, 1/4" CLEAR TEMPERED GLASS)
- D — SAFTIFIRST SUPERCLEAR - 45-HS-LI, 45 MINUTE RATING.
- E — SAFTIFIRST SUPERLITE II-XL - 90 MINUTE RATING.
- F — ONE-WAY GLAZING
- G — 3/4" INSULATED TINTED EXTERIOR FIRE RATED GLASS - FIRELITE IGU FOR 3/4" GLAZING FRAME.

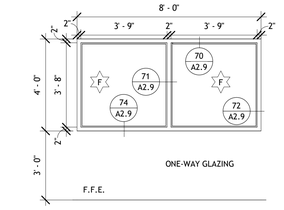

WINDOW TYPE A
A
3/8" = 1'-0"

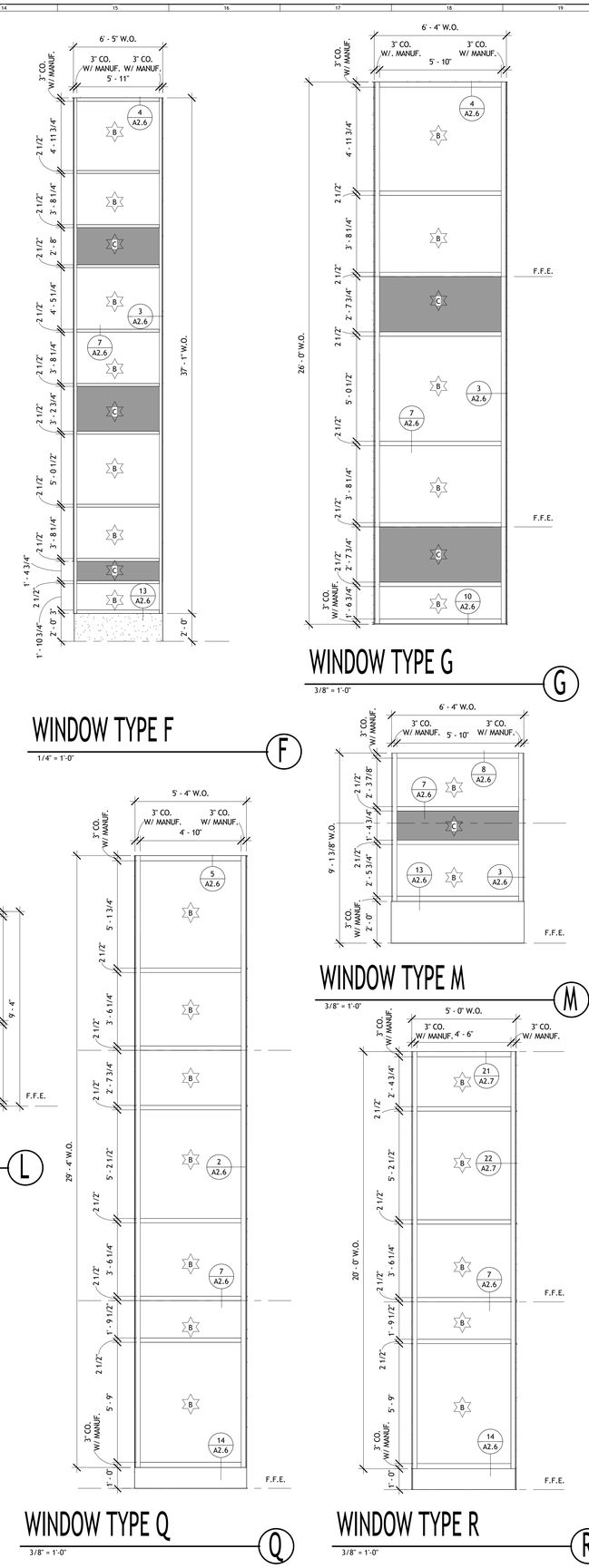

COMMUNITY TECTONICS ARCHITECTS
7610 Gleason Road, Knoxville, TN 37919
Ph. (865) 637-0890 www.communitytectonics.com

Upland Design Group
P.O. Box 1026, Crossville, TN 38557
Ph. (931) 484-7541 www.uplanddesigngroup.com

W&O Construction
150 Construction Drive, Livingston, TN 38570
Ph. (931) 403-1000 www.wocc.com

PROJECT
JOHNSON HALL RENOVATION - PKG 3
JOHNSON HALL RENOVATION & FOSTER DEMOLITION
SBC Nº 364/011-04-2022CM

OWNER: TENNESSEE TECH. UNIVERSITY
LOCATION: COOKEVILLE, TN

SEAL

NO.	DESCRIPTION	DATE
4	Addendum 1 - PKG 3	5-16-25
7	Addendum 3 - PKG 3	6-11-25
8	Addendum 5 - PKG 3	6-24-25

JOB NO. 22025

ISSUE DATE 3-28-25

SHEET TITLE: WINDOW TYPES

DRAWN: CWD

REVIEW: KAC

A2.5

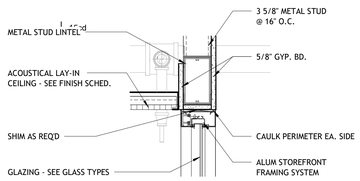

HEAD DETAIL 39
1 1/2" = 1'-0"

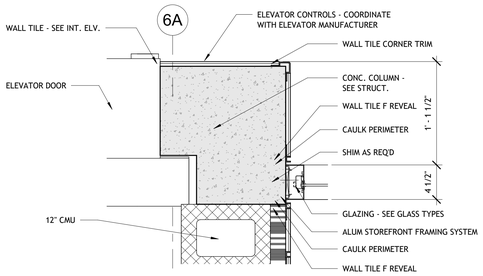

JAMB DETAIL 40
1 1/2" = 1'-0"

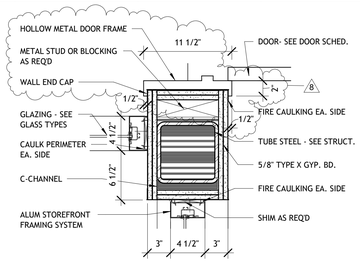

JAMB DETAIL 41
1 1/2" = 1'-0"

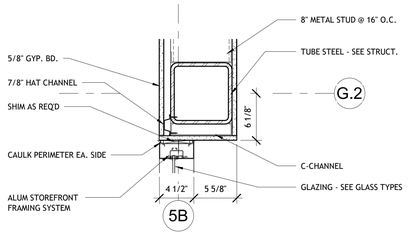

JAMB DETAIL 42
1 1/2" = 1'-0"

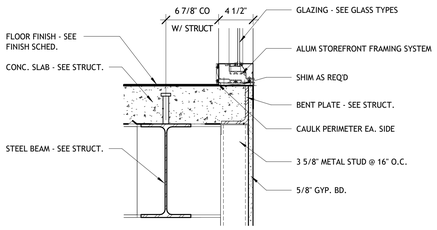

SILL DETAIL 43
1 1/2" = 1'-0"

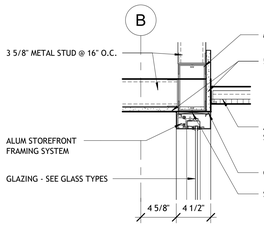

HEAD DETAIL 44
1 1/2" = 1'-0"

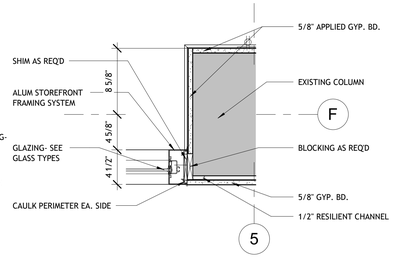

JAMB DETAIL 45
1 1/2" = 1'-0"

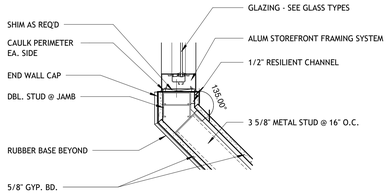

JAMB DETAIL 46
1 1/2" = 1'-0"

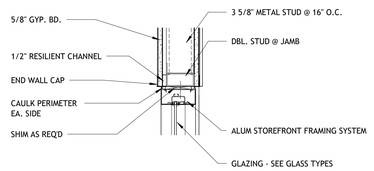

JAMB DETAIL 47
1 1/2" = 1'-0"

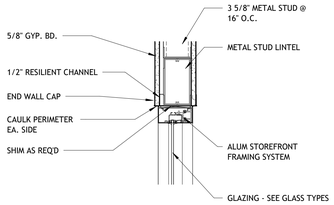

HEAD DETAIL 48
1 1/2" = 1'-0"

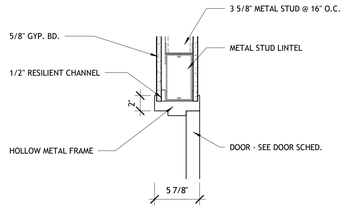

HEAD DETAIL 49
1 1/2" = 1'-0"

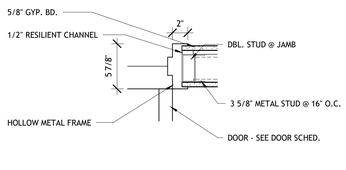

JAMB DETAIL 50
1 1/2" = 1'-0"

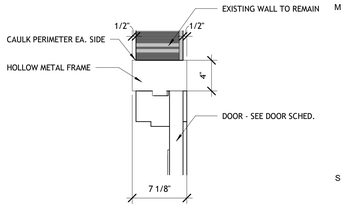

HEAD DETAIL 51
1 1/2" = 1'-0"

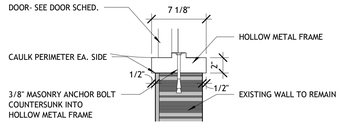

JAMB DETAIL 52
1 1/2" = 1'-0"

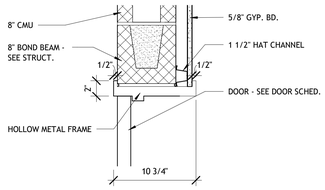

HEAD DETAIL 53
1 1/2" = 1'-0"

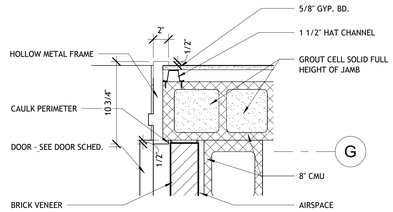

JAMB DETAIL 54
1 1/2" = 1'-0"

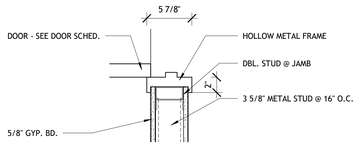

JAMB DETAIL 55
1 1/2" = 1'-0"

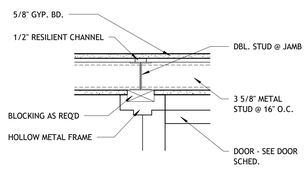

JAMB DETAIL 56
1 1/2" = 1'-0"

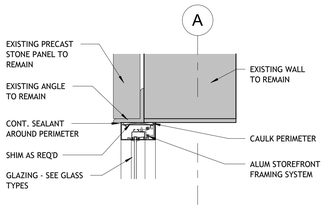

HEAD DETAIL 57
1 1/2" = 1'-0"

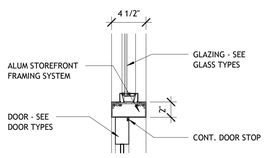

TRANSOM DETAIL 58
1 1/2" = 1'-0"

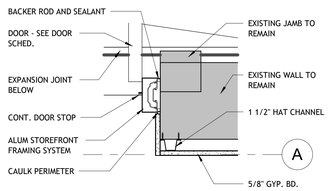

JAMB DETAIL 59
1 1/2" = 1'-0"

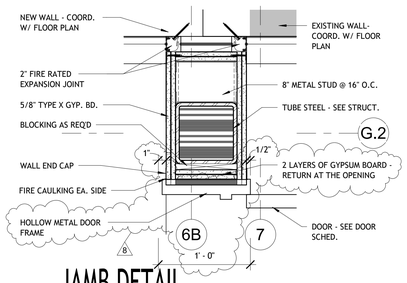

JAMB DETAIL 60
1 1/2" = 1'-0"

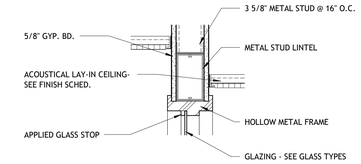

HEAD DETAIL 61
1 1/2" = 1'-0"

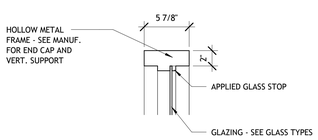

JAMB DETAIL 62
1 1/2" = 1'-0"

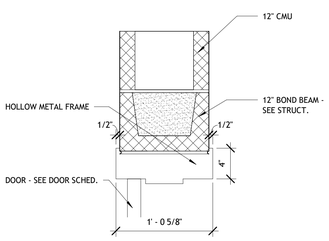

HEAD DETAIL 63
1 1/2" = 1'-0"

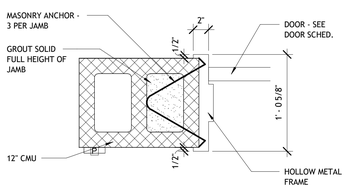

JAMB DETAIL 64
1 1/2" = 1'-0"

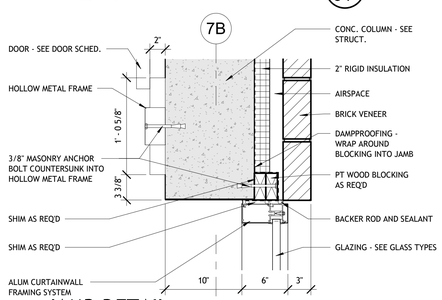

JAMB DETAIL 65
1 1/2" = 1'-0"

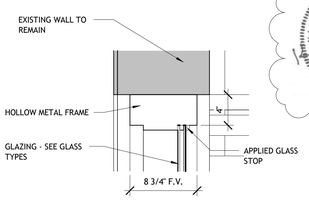

HEAD DETAIL 66
1 1/2" = 1'-0"

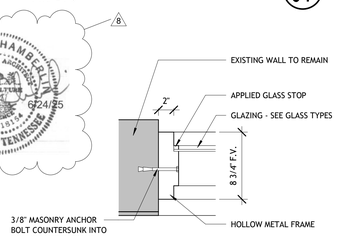

JAMB DETAIL 67
1 1/2" = 1'-0"

COMMUNITY TECTONICS ARCHITECTS
7610 Gleason Road, Knoxville, TN 37919
Ph. (865) 637-0890
www.communitytectonics.com

Upland Design Group
P.O. Box 1326, Crossville, TN 38557
Ph. (931) 484-7541
www.uplanddesigngroup.com

W&O Construction
150 Construction Drive, Livingston, TN 38570
Ph. (931) 403-1000
www.wocc.com

PROJECT
JOHNSON HALL RENOVATION - PKG 3
JOHNSON HALL RENOVATION & FOSTER DEMOLITION
SBC Nº 364/011-04-2022CM

OWNER: TENNESSEE TECH. UNIVERSITY
LOCATION: COOKEVILLE, TN

SEAL
KIM ALLEN CHAMBERLIN
REGISTERED ARCHITECT
ARCHITECTURE
NO. 101374
STATE OF TENNESSEE
3/28/25

NO.	DESCRIPTION	DATE
8	Addendum 5 - PKG 3	6-24-25

JOB NO. 22025

ISSUE DATE 3-28-25

SHEET TITLE
DOOR AND WINDOW DETAILS

DRAWN KJ
REVIEW KAC

A2.8

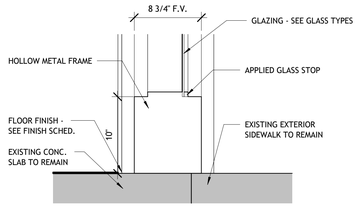

SILL DETAIL 68
1 1/2" = 1'-0"

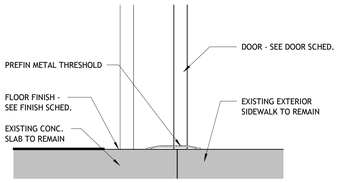

SILL DETAIL 69
1 1/2" = 1'-0"

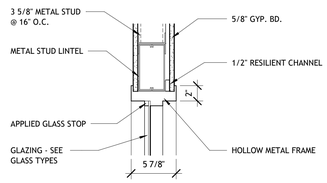

HEAD DETAIL 70
1 1/2" = 1'-0"

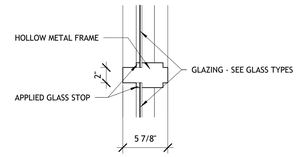

TRANSOM DETAIL 71
1 1/2" = 1'-0"

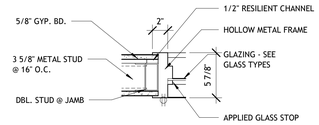

JAMB DETAIL 72
1 1/2" = 1'-0"

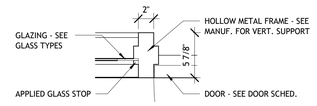

JAMB DETAIL 73
1 1/2" = 1'-0"

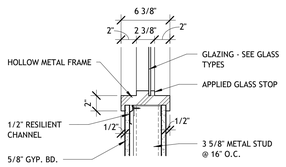

SILL DETAIL 74
1 1/2" = 1'-0"

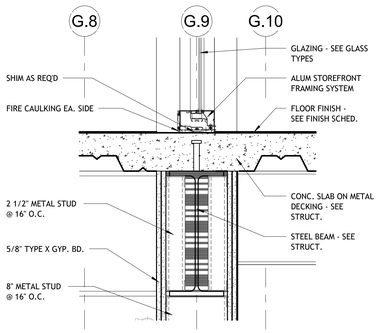

SILL DETAIL 75
1 1/2" = 1'-0"

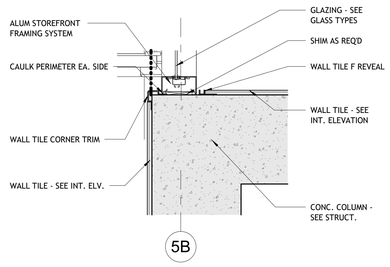

JAMB DETAIL 76
1 1/2" = 1'-0"

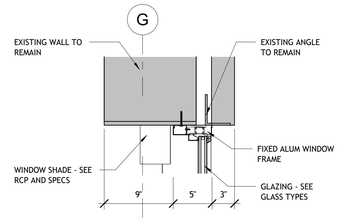

HEAD DETAIL 77
1 1/2" = 1'-0"

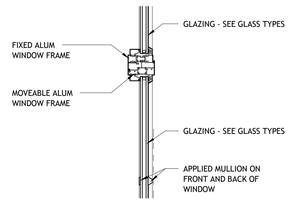

TRANSOM DETAIL 78
1 1/2" = 1'-0"

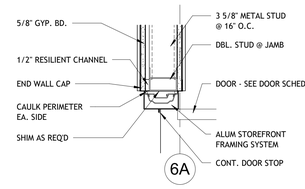

JAMB DETAIL 79
1 1/2" = 1'-0"

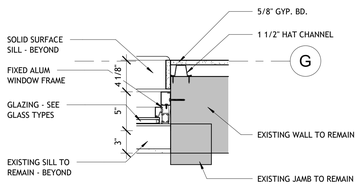

JAMB DETAIL 80
1 1/2" = 1'-0"

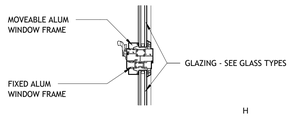

TRANSOM DETAIL 81
1 1/2" = 1'-0"

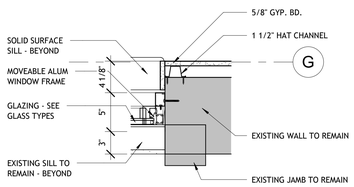

JAMB DETAIL 82
1 1/2" = 1'-0"

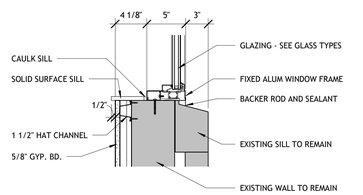

SILL DETAIL 83
1 1/2" = 1'-0"

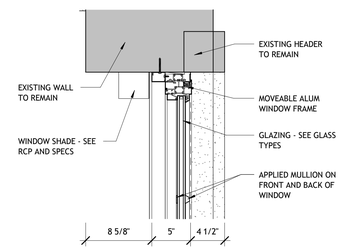

HEAD DETAIL 84
1 1/2" = 1'-0"

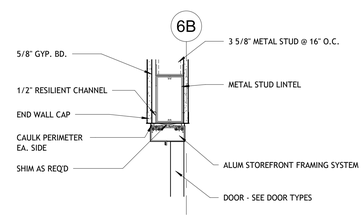

HEAD DETAIL 85
1 1/2" = 1'-0"

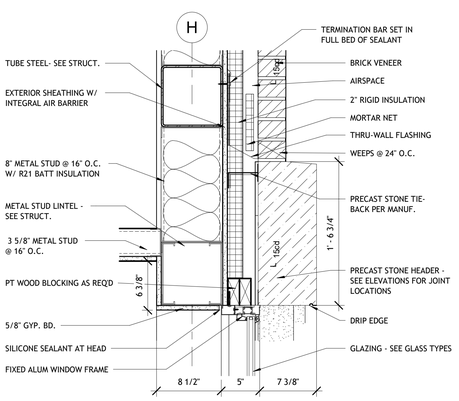

ROUND WINDOW HEAD 86
1 1/2" = 1'-0"

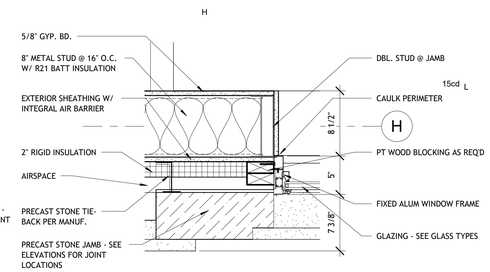

ROUND WINDOW JAMB 87
1 1/2" = 1'-0"

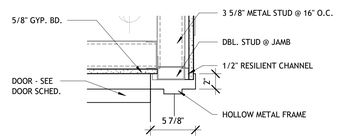

JAMB DETAIL 88
1 1/2" = 1'-0"

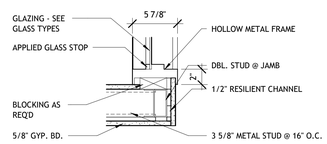

JAMB DETAIL 89
1 1/2" = 1'-0"

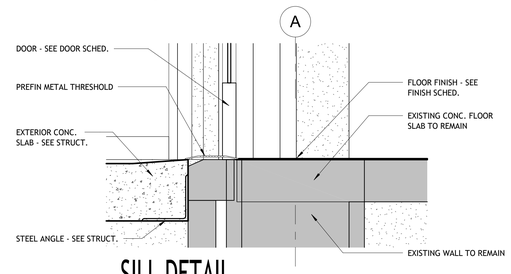

SILL DETAIL 90
1 1/2" = 1'-0"

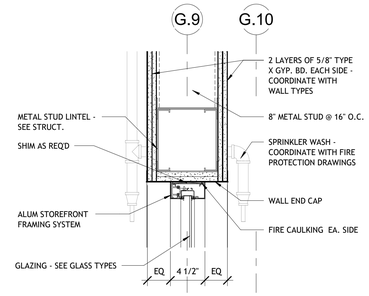

HEAD DETAIL 91
1 1/2" = 1'-0"

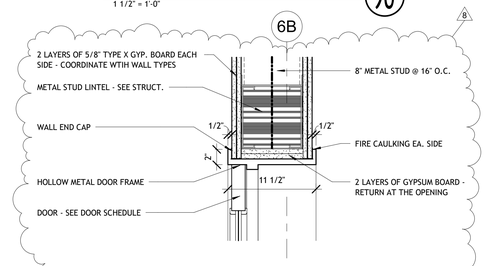

HEAD DETAIL 93
1 1/2" = 1'-0"

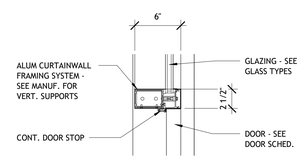

TRANSOM DETAIL 92
1 1/2" = 1'-0"

COMMUNITY TECTONICS ARCHITECTS
7610 Gleason Road
Knoxville, TN 37919
Ph. (865) 637-0890
www.communitytectonics.com

Upland Design Group
P.O. Box 1126
Crossville, TN 38557
Ph. (931) 484-7541
www.uplanddesigngroup.com

W&O Construction
150 Construction Drive
Livingston, TN 38570
Ph. (931) 403-1000
www.wocc.com

PROJECT
JOHNSON HALL RENOVATION - PKG 3
JOHNSON HALL RENOVATION & FOSTER DEMOLITION
SBC Nº 364/011-04-2022CM

OWNER: TENNESSEE TECH. UNIVERSITY
LOCATION: COOKEVILLE, TN

SEAL
KIM ALLEN CHAMBERLIN
REGISTERED ARCHITECT
AGRICULTURE
EST. 1814
STATE OF TENNESSEE
3/28/25

NO.	DESCRIPTION	DATE
8	Addendum 5 - PKG 3	6-24-25

JOB NO. 22025

ISSUE DATE 3-28-25

SHEET TITLE
DOOR AND WINDOW DETAILS

DRAWN KJ
REVIEW KAC

A2.9

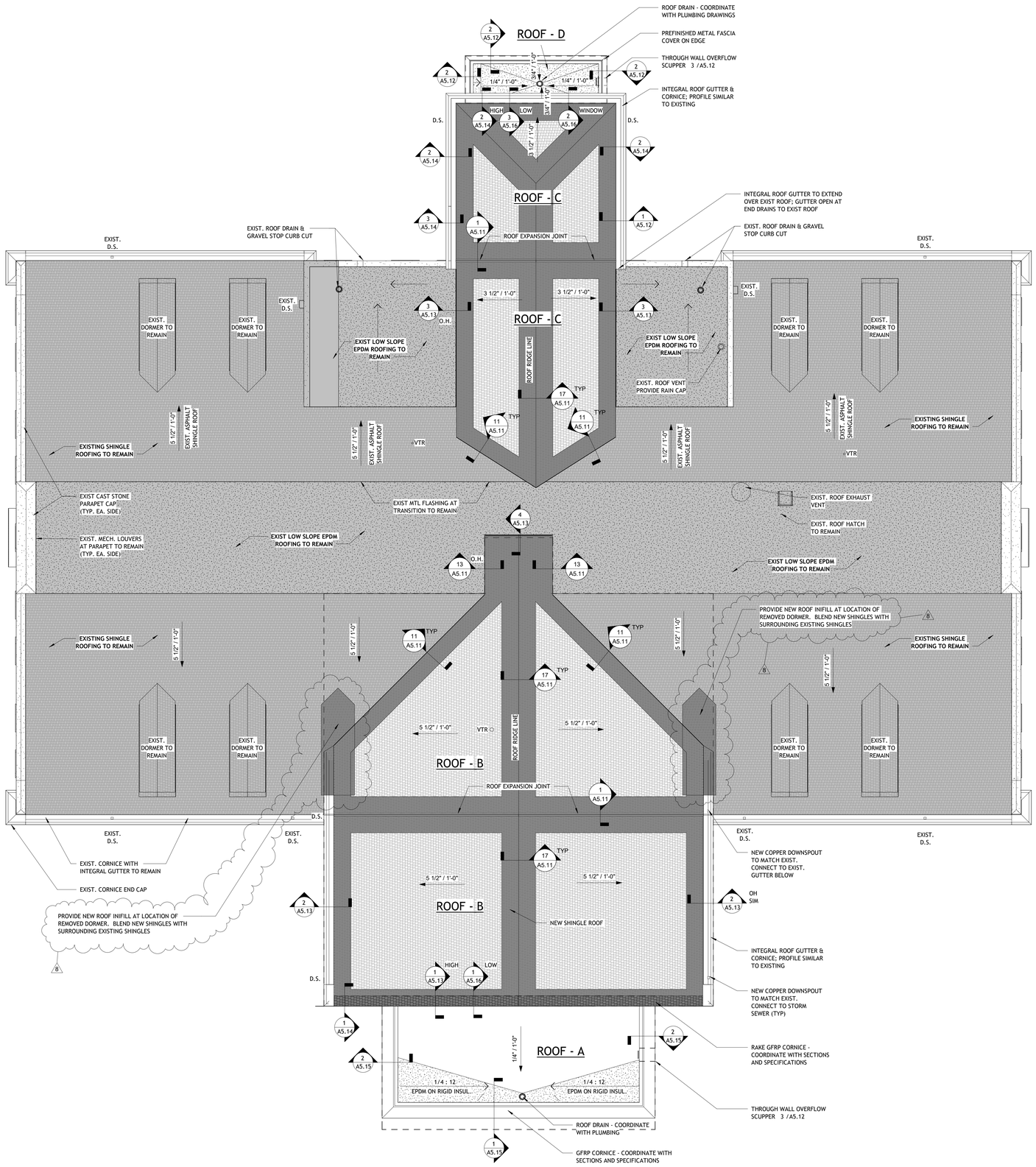

ROOF PLAN

1/8" = 1'-0"

PLAN NORTH TRUE NORTH

SYMBOL LEGEND

DS - DOWNSPOUT (SEE DETAIL 16 /A5.11)

VTR - VENT THRU ROOF (SEE DETAILS 5 /A5.11) AND PLUMBING DRAWINGS FOR MORE INFORMATION.

RD - ROOF DRAIN (SEE DETAIL 14 /A5.11)

TWS - THROUGH WALL OVERFLOW SUPPER - (SEE DETAIL 3 /A5.12)

NEW EPDM ROOFING MEMBRANE ON HIGH DENSITY COVERBOARD ON 5 1/2" ISOCYANURATE FOAM WITH FIBERGLASS REINFORCING INSULATION OVER SLOPING ROOF STRUCTURE. MECHANICALLY FASTEN FIRST LAYER AND FULLY ADHERE SUBSEQUENT LAYERS.

NEW EPDM ROOFING MEMBRANE ON HIGH DENSITY COVERBOARD ON TAPERED ISOCYANURATE FOAM WITH FIBERGLASS REINFORCING INSULATION SLOPED AS REQUIRED (MIN. 1/4" = 12") TO PROVIDE POSITIVE DRAINAGE TO ROOF DRAIN.

NEW ARCHITECTURAL GLASS FIBER MAT REINF. ASPHALT SHINGLES ON SHINGLE UNDERLAYMENT ON 5/8" EXTERIOR PLYWOOD ON 5 1/2" RIGID INSULATION ON TOP OF METAL DECK. MECHANICALLY FASTEN ALL LAYERS.

NEW 3 FT. WIDE LAYER OF ICE AND DAM SHIELD

EXISTING MEMBRANE ROOF TO REMAIN

EXISTING SHINGLE ROOF TO REMAIN

ROOF DRAIN & DOWNSPOUT CALCULATIONS

ROOF - A

HORIZONTAL SQUARE FEET - 1,145 SQFT
ROOF PITCH MULTIPLIER - N/A

GPM = 3.25 IN/HR x 1,145 SQFT / 96.23
GPM = 3721.25 / 96.23
GMP = 38.67

VERTICAL LEADER SIZE - MIN. 2-1/2 IN
(PER 2012 IPC TABLE 1106.3)

ROOF GUTTER SIZE - N/A
(PER 2012 IPC TABLE 1106.6)

ROOF - B

HORIZONTAL SQUARE FEET - 5,042 SQFT
(5,461 W/ MULTIPLIER)
ROOF PITCH MULTIPLIER - 1.083

GPM = 3.25 IN/HR x 5,461 SQFT / 96.23
GPM = 17748.25 / 96.23
GMP = 184.43 / 2
GMP = 92.215

VERTICAL LEADER SIZE - MIN. 3 IN
(PER 2012 IPC TABLE 1106.3)

ROOF GUTTER SIZE - MIN. 4 IN x 2 1/2 IN W/ 1/4" SLOPE
(PER 2012 IPC TABLE 1106.6)

ROOF - C

HORIZONTAL SQUARE FEET - 945 SQFT
(1,056.51 W/ MULTIPLIER)
ROOF PITCH MULTIPLIER - 1.118

GPM = 3.25 IN/HR x 1,057 SQFT / 96.23
GPM = 3,435 / 96.23
GMP = 35.69

VERTICAL LEADER SIZE - 2-1/2 IN
(PER 2012 IPC TABLE 1106.3)

ROOF GUTTER SIZE - MIN. 1-1/2 IN x 2 1/2 IN W/ 1/2" SLOPE
(PER 2012 IPC TABLE 1106.6)

ROOF - D

HORIZONTAL SQUARE FEET - 157 SQFT
ROOF PITCH MULTIPLIER - N/A

GPM = 3.25 IN/HR x 157 SQFT / 96.23
GPM = 510.25 / 96.23
GMP = 5.30

VERTICAL LEADER SIZE - MIN. 2-1/2 IN
(PER 2012 IPC TABLE 1106.3)

ROOF GUTTER SIZE - N/A
(PER 2012 IPC TABLE 1106.6)

GENERAL ROOF NOTES

1. ROOF TOP PENETRATIONS SHOWN MAY NOT BE ALL INCLUSIVE. SEE MECHANICAL AND PLUMBING DRAWINGS FOR MORE INFORMATION.
2. TAPERED INSULATION SHALL SLOPE A MINIMUM OF 1/4" PER 1'-0" AND SHALL BE A MINIMUM THICKNESS OF 4" AT ALL VALLEYS, UNLESS NOTED OTHERWISE. COORDINATE INSULATION THICKNESS AT ROOF DRAINS WITH PLUMBING DRAWINGS AND MANUFACTURER'S REQUIREMENTS.
3. COORDINATE MECHANICAL UNIT LOCATIONS WITH ACTUAL INSULATION HEIGHTS TO PROVIDE A MIN. OF 8" BETWEEN ROOF AND TOP OF CURBS.
4. PROVIDE PRECAST SPLASH BLOCKS AT ALL LOCATIONS WHERE DOWNSPOUTS DISCHARGE ONTO LOWER ROOFS.
5. PROVIDE GUTTER EXPANSION JOINTS EVERY 30 FEET MAX AND ANY PREFINISHED METAL GUTTERS - COORDINATE WITH MANUFACTURER'S REQUIREMENTS.
6. COORDINATE THE ROOF EDGE FLASHING AND WOOD BLOCKING DEPTHS AS REQUIRED TO ACCOMMODATE THE ACTUAL TAPERED INSULATION THICKNESS.
7. EDGE METAL SHALL BE FASTENED TO WOOD BLOCKING PER ES-1 DETAIL.
8. LOUVERS TO BE STORM-RESISTANT FIXED BLADE LOUVERS (UNLESS OTHERWISE NOTED ON ARCHITECTURAL, OR M,P,& E DRAWINGS AND SPECIFICATIONS). LOUVERS SHALL BE INSTALLED WATER TIGHT WITH REMOVABLE FASTENERS FROM THE EXTERIOR SIDE. PROVIDE INSECT SCREENS.
9. ALL FASTENERS IN CONTRACT WITH PRESSURE TREATED WOOD SHALL BE HOT DIPPED GALVANIZED. TWO FASTENERS PER STUD TYPICAL. AT CONTRACTOR'S OPTION - FASTENERS CAN BE STAINLESS STEEL
10. FOR ROOF INSULATION ON MEMBRANE ROOFS, THE FIRST LAYER OF INSULATION WILL BE MECHANICALLY FASTENED WITH UPPER LEVELS TO BE FULLY ADHERED. COORDINATE WITH SPECIFICATIONS SECTION 07 21 00.
11. MAINTAIN EXISTING ROOF WARRANTIES WHEN INSTALLING NEW ROOFS. COORDINATE WITH MANUFACTURERS.

COMMUNITY TECTONICS ARCHITECTS
7610 Gleason Road Knoxville, TN 37919
Ph. (865) 637-0890 www.communitytectonics.com

Upland Design Group
P.O. Box 11026 Cleveland, TN 38557
Ph. (931) 484-7541 www.uplanddesigngroup.com

W&O Construction
150 Construction Drive Livingston, TN 38570
Ph. (931) 403-1000 www.wocc.com

PROJECT
JOHNSON HALL RENOVATION - PKG 3
JOHNSON HALL RENOVATION & FOSTER DEMOLITION
SBC Nº 364/011-04-2022CM

OWNER TENNESSEE TECH. UNIVERSITY
LOCATION COOKEVILLE, TN

SEAL
TIMOTHY KIM ALLEN CHAMBERLAIN
REGISTERED ARCHITECT
No. 101811
STATE OF TENNESSEE
3/28/25

NO.	DESCRIPTION	DATE
8	Addendum 5 - PKG 3	6-24-25

JOB NO. 22025

ISSUE DATE 3-28-25

SHEET TITLE ROOF PLAN

DRAWN CWD

REVIEW KAC

A5.10

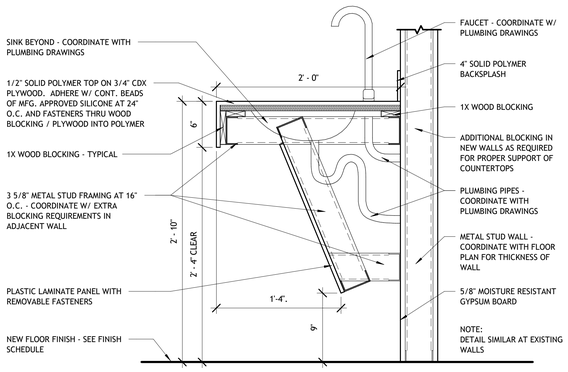

LAVATORY COUNTER 1

1 1/2" = 1'-0"

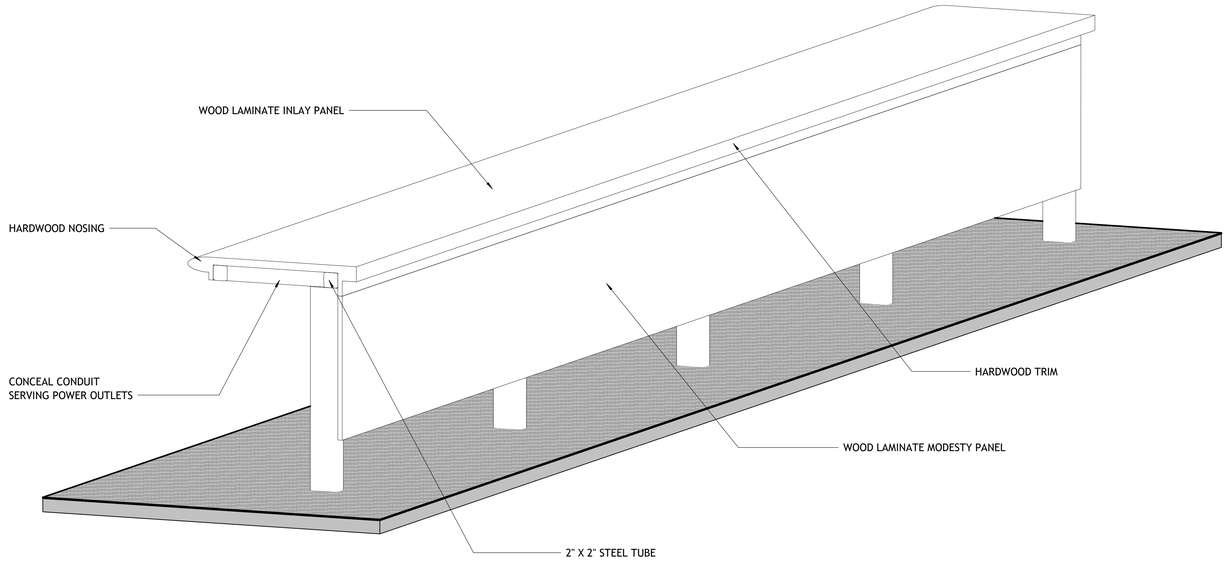

CASEWORK 3D VIEW 4

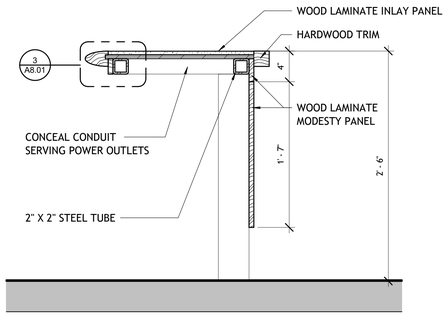

DESK SECTION DETAIL 2

1 1/2" = 1'-0"

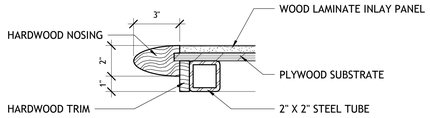

DESK NOSING SECTION DETAIL 3

3" = 1'-0"

LARGE FORMAT TILE

1 — LARGE FORMAT WALL TILE PANELS - 24" X48" - FIELD COLOR - COORDINATE WITH FINISH PLANS

2 — NOT USED

NOTES:
OUTSIDE CORNERS - STAINLESS STEEL HEAVY DUTY EDGE-PROTECTION OUTSIDE CORNER TRIM SIMILAR TO SCHLUTER ECK-E OR APPROVED EQUAL. COORDINATE THICKNESS WITH TILE AND TILE BED.

BETWEEN PANELS - STAINLESS STEEL "F" SHAPED CHANNEL TRIM WITH 1/2" CLEAR CHANNEL WIDTH SIMILAR TO SCHLUTER DECO-SG OR APPROVED EQUAL. COORDINATE THICKNESS WITH TILE AND TILE BED. DECORATIVE STRIPS BETWEEN PANELS AS SHOWN ON INTERIOR ELEVATIONS

AT PORCELAIN FLOOR TILE TO LARGE FORMAT PORCELAIN WALL TILE TRANSITION - STAINLESS STEEL COVE-SHAPED PROFILE EDGE TRIM SIMILAR TO SCHLUTER - DILEX-EHK

COORDINATE PLACEMENT OF BETWEEN PANEL TRIM PIECES WITH MAXIMUM SIZE OF LARGE FORMAT TILE PANELS. PROVIDE STANDARD JOINT BETWEEN PANELS WHERE STAINLESS STEEL TRIM IS NOT SHOWN.

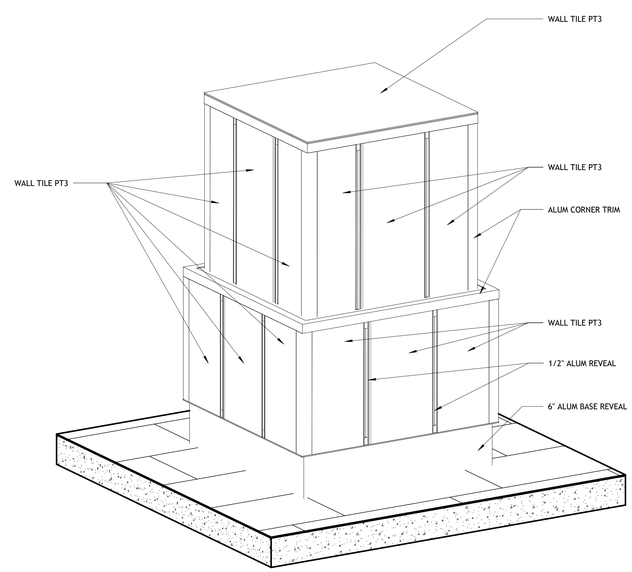

DISPLAY CASE ISOMETRIC 5

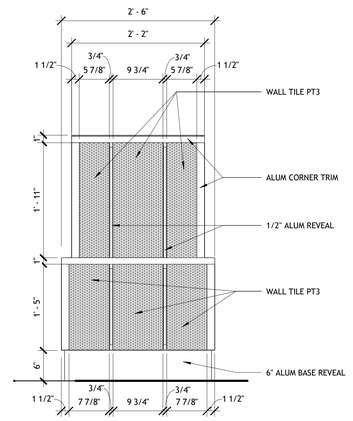

DISPLAY CASE ELEVATION 6

1" = 1'-0"

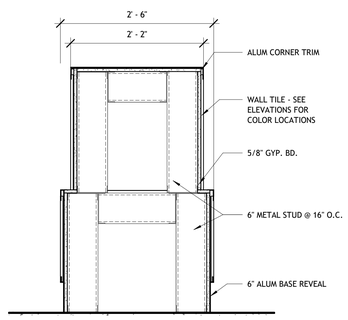

DISPLAY CASE SECTION 7

1" = 1'-0"

8

COMMUNITY TECTONICS ARCHITECTS
7610 Gleason Road
Knoxville, TN 37919
Ph. (865) 637-0890
www.communitytectonics.com

Upland Design Group
P.O. Box 1026
Crossville, TN 38557
Ph. (931) 484-7541
www.uplanddesigngroup.com

W&Q Construction
150 Construction Drive
Livingston, TN 38570
Ph. (931) 403-1000
www.wqcc.com

PROJECT
JOHNSON HALL RENOVATION - PKG 3
JOHNSON HALL RENOVATION & FOSTER DEMOLITION
SBC Nº 364/011-04-2022CM

OWNER: TENNESSEE TECH. UNIVERSITY
LOCATION: COOKEVILLE, TN

SEAL

NO.	DESCRIPTION	DATE
8	Addendum 5 - PKG 3	6-24-25

JOB NO. 22025

ISSUE DATE 3-28-25

SHEET TITLE: CASEWORK DETAILS

DRAWN: KJ

REVIEW: KAC

A8.01

Consulting Engineers
630 Southgate Avenue - Suite C
Nashville, Tennessee 37203
(615) 726-2902 Phone
www.loganpatriengineering.com
LPE Job No.: 23028

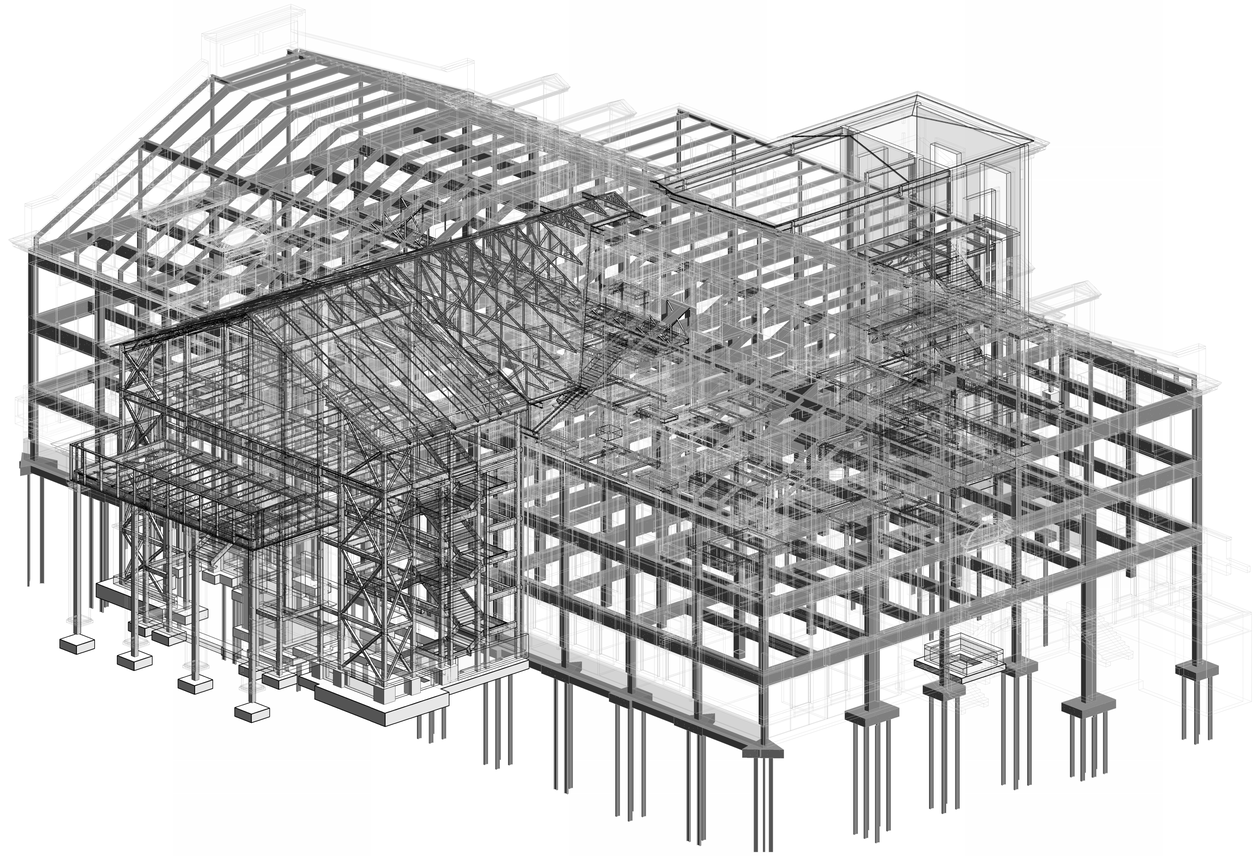

STRUCTURAL AXONOMETRIC OVERVIEW

STRUCTURAL ABBREVIATIONS

ALT	ALTERNATE	EQ	EQUAL	MISC	MISCELLANEOUS
APPROX	APPROXIMATELY	EW	EACH WAY	MTL	METAL
ARCH	ARCHITECT	EXIST	EXISTING	NIC	NOT IN CONTRACT
BC	BOTTOM CHORD	EXP	EXPANSION	NS	NEAR SIDE
BLDG	BUILDING	EXT	EXTERIOR	NTS	NOT TO SCALE
BM	BEAM	FIN	FINISH	OPNG	OPENING
BOTT	BOTTOM	FLR	FLOOR	PCJ	PRECAST CONCRETE JOIST
BRG	BEARING	FND	FOUNDATION	PED	PEDESTAL
CG	CENTER OF GRAVITY	FS	FAR SIDE	PL	PLATE
CIP	CAST IN PLACE	FT	FOOT	PLF	POUNDS PER LINEAR FT
CJ	CONSTRUCTION JOINT	FTG	FOOTING	PSF	POUNDS PER SQUARE FT
CL	CENTERLINE	GA	GAGE	PSI	POUNDS PER SQUARE IN
CLR	CLEAR	GALV	GALVANIZED	PT	POST TENSIONED
CMU	CONCRETE MASONRY UNIT	GC	GENERAL CONTRACTOR	REINF	REINFORCING
COL	COLUMN	HC	HOLLOW CORE	REQD	REQUIRED
CONC	CONCRETE	HCP	HOLLOW CORE PLANK	REV	REVISED/REVISION
CONT	CONTINUOUS	HK	HOOK	SCHED	SCHEDULE
CONTR	CONTRACTOR	HORIZ	HORIZONTAL	SECT	SECTION
CTR	CENTER	HP	HIGH POINT	SIM	SIMILAR
DBL	DOUBLE	INFO	INFORMATION	SOG	SLAB ON GRADE
DET	DETAIL	INT	INTERIOR	SPECS	SPECIFICATIONS
DIA / Ø	DIAMETER	JT	JOINT	SQ	SQUARE
DIM	DIMENSION	K	KIP(s)	STD	STANDARD
DN	DOWN	KIP(s)	1000 POUNDS	STL	STEEL
DR	DRAIN	L	ANGLE	STRUCTL	STRUCTURAL
DWG	DRAWING	LG	LONG	SW	SHEARWALL/SHORT WAY
EA	EACH	LLH	LONG LEG HORIZONTAL	TEMP	TEMPORARY
EE	EACH END	LLV	LONG LEG VERTICAL	TOW	TOP OF WALL
EF	EACH FACE	LP	LOW POINT	TYP	TYPICAL
EJ	EXPANSION JOINT	LW	LONG WAY	UNO	UNLESS NOTED OTHERWISE
ELEV	ELEVATION	MAS	MASONRY	VERT	VERTICAL
ENGR	ENGINEER	MAX	MAXIMUM	W/	WITH
EOBP	EDGE OF BENT PLATE	MECHL	MECHANICAL	W/O	WITHOUT
EOR	ENGINEER OF RECORD	MFG	MANUFACTURER	WP	WORK POINT
EOS	EDGE OF SLAB	MIN	MINIMUM	WWF	WELDED WIRE FABRIC

VIEW REFERENCE SYMBOLS

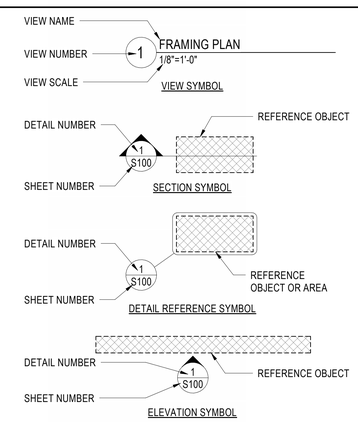

UNIVERSAL SYMBOLS

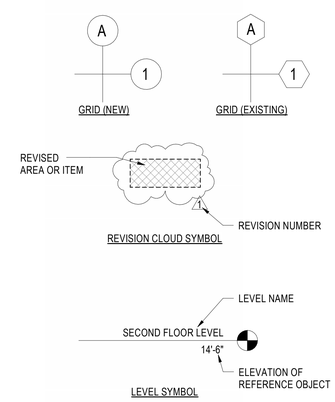

MATERIAL IDENTIFICATION

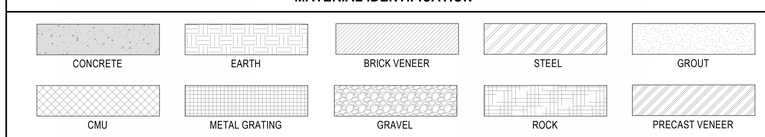

1

INDEX OF STRUCTURAL DRAWINGS

SHEET NUMBER	SHEET NAME
S0.00	STRUCTURAL COVER SHEET & INDEX OF STRUCTURAL DRAWINGS
S0.01	STRUCTURAL GENERAL NOTES
S0.02	SPECIAL INSPECTION NOTES
S0.03	TYPICAL DETAILS & SCHEDULES
S0.04	TYPICAL DETAILS & SCHEDULES
S0.05	TYPICAL DETAILS & SCHEDULES
S0.06	TYPICAL DETAILS & SCHEDULES
S0.07	TYPICAL DETAILS & SCHEDULES
S0.08	TYPICAL DETAILS & SCHEDULES
S0.20	FIRST FLOOR SLAB PLAN
S0.21	LOAD MAP - FOURTH FLOOR LOAD MAP
S0.22	LOAD MAP - ROOF SNOW LOAD DIAGRAM
S0.23	LOAD MAP - ROOF UPLIFT DIAGRAM
SD100	STRUCTURAL DEMOLITION PLAN
S1.10	OVERALL FOUNDATION & FIRST FLOOR PLAN
S1.11	FOUNDATION & FIRST FLOOR PLAN - PART A
S1.12	FOUNDATION & FIRST FLOOR PLAN - PART B
1 S1.13	FOUNDATION & FIRST FLOOR PLAN - PART C
S1.15	ENLARGED PLAN & DETAILS - FIRE PUMP ROOM
S1.20	OVERALL SECOND FLOOR FRAMING PLAN
S1.21	SECOND FLOOR FRAMING PLAN - PART A
1 S1.22	SECOND FLOOR AND LOW ROOF FRAMING PLAN - PART B
S1.23	SECOND FLOOR FRAMING PLAN - PART C
S1.30	OVERALL THIRD FLOOR FRAMING PLAN
S1.31	THIRD FLOOR FRAMING PLAN - PART A
1 S1.32	THIRD FLOOR FRAMING PLAN - PART B
S1.33	THIRD FLOOR FRAMING PLAN - PART C
S1.40	OVERALL FOURTH FLOOR FRAMING PLAN
S1.41	FOURTH FLOOR AND LOW ROOF FRAMING PLAN - PART A
1 S1.42	FOURTH FLOOR FRAMING PLAN - PART B
S1.43	FOURTH FLOOR FRAMING PLAN - PART C
S1.45	MEZZANINE LEVEL - PARTIAL PLAN AND DETAILS
S1.50	OVERALL ROOF FRAMING PLAN
S1.51	ROOF FRAMING PLAN - PART A
S1.52	ROOF FRAMING PLAN - PART B
S2.10	FOUNDATION & FIRST FLOOR SECTIONS
S2.11	FOUNDATION & FIRST FLOOR SECTIONS
S2.12	FOUNDATION & FIRST FLOOR SECTIONS
S2.20	FLOOR FRAMING SECTIONS
S2.21	FLOOR FRAMING SECTIONS
S2.22	FLOOR FRAMING SECTIONS
1 S2.23	FLOOR FRAMING SECTIONS - ALTERNATES
S2.30	LOW ROOF FRAMING SECTIONS
S2.40	ROOF FRAMING SECTIONS
S2.41	ROOF FRAMING SECTIONS
S3.10	FRAME ELEVATIONS

COMMUNITY TECTONICS ARCHITECTS
7610 Gleason Road, Knoxville, TN 37919
Ph. (865) 637-0890, www.communitytectonics.com

Upland Design Group
P.O. Box 1026, Crossville, TN 38557
Ph. (931) 484-7541, www.uplanddesigngroup.com

W&O Construction
150 Construction Drive, Livingston, TN 38570
Ph. (931) 403-1000, www.wocc.com

PROJECT
JOHNSON HALL RENOVATION - PKG 3
JOHNSON HALL RENOVATION & FOSTER DEMOLITION
SBC Nº 364/011-04-2022CM

OWNER: TENNESSEE TECH. UNIVERSITY
LOCATION: COOKEVILLE, TN

SEAL

NO.	DESCRIPTION	DATE
1	Addendum #5	6-24-25

JOB NO. 22025

ISSUE DATE 3/28/2025

SHEET TITLE
STRUCTURAL COVER SHEET & INDEX OF STRUCTURAL DRAWINGS

DRAWN: JE
REVIEW: RP

S0.00

Consulting Engineers
630 Southgate Avenue - Suite C
Nashville, Tennessee 37203
(615) 726-2902 Phone
www.loganpatriengineering.com
LPE Job No.: 23028

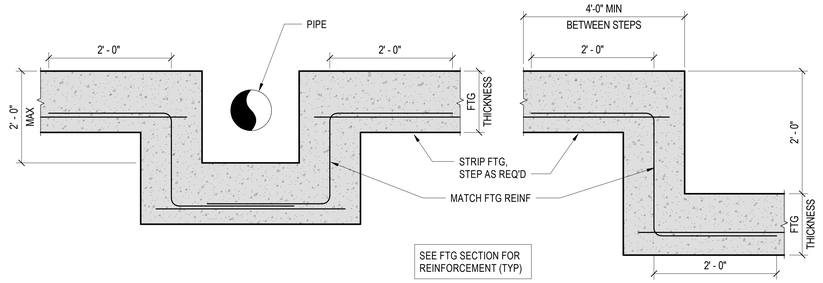

TYPICAL PLUMBING STEP **TYPICAL ELEVATION STEP**

1 TYPICAL STRIP FOOTING ELEVATION DETAILS
N.T.S.

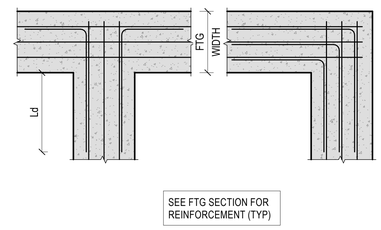

INTERSECTION PLAN **CORNER PLAN**

3 TYPICAL STRIP FOOTING PLAN DETAILS
N.T.S.

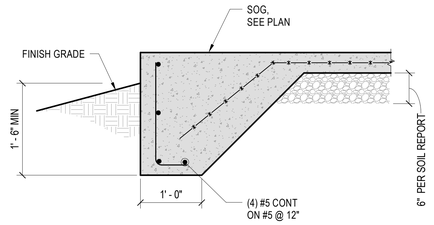

4 TYPICAL SLAB EDGE TURN DOWN DETAIL
N.T.S.

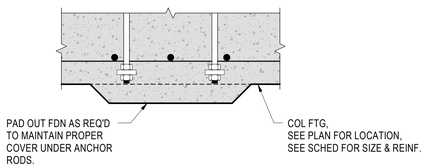

5 TYPICAL PADDED OUT COLUMN FOUNDATION DETAIL
N.T.S.

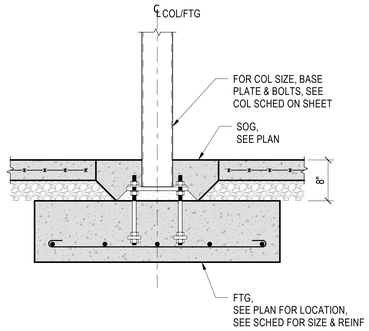

6 TYPICAL COLUMN FOOTING DETAIL
N.T.S.

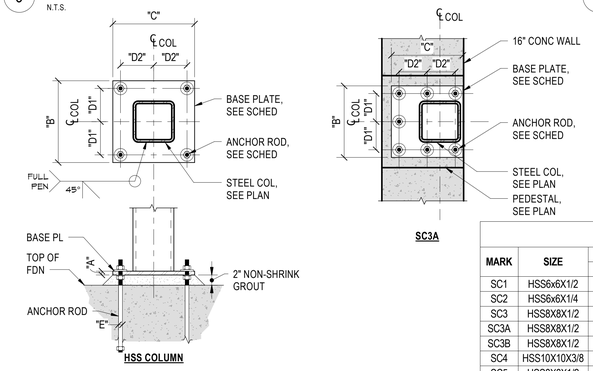

7 TYPICAL STEEL COLUMN BASE PLATE DETAILS AND SCHEDULE
N.T.S.

STEEL COLUMN BASE PLATE SCHEDULE

MARK	SIZE	BASE PLATE			ANCHOR RODS							REMARKS
		A	B	C	D1	D2	E	F	TYPE	GRADE	QTY	
SC1	HSS6x6X1/2	3/4"	12"	12"	4 1/2"	4 1/2"	3/4"	12"	B	F1554GR36	4	
SC2	HSS6x6X1/4	3/4"	12"	12"	4 1/2"	4 1/2"	3/4"	12"	B	F1554GR36	4	
SC3	HSS8X8X1/2	3/4"	14"	14"	5 1/2"	5 1/2"	3/4"	12"	B	F1554GR36	8	
SC3A	HSS8X8X1/2	3/4"	14"	14"	5 1/2"	4 3/4"	3/4"	12"	B	F1554GR36	7	SEE DETAIL
SC3B	HSS8X8X1/2	1"	14"	14"	5 1/2"	5 1/2"	3/4"	12"	B	F1554GR36	5	SEE DETAIL 9/S2.12
SC4	HSS10X10X3/8	3/4"	16"	16"	6 1/2"	6 1/2"	3/4"	12"	B	F1554GR36	8	
SC5	HSS8X8X1/2	1"	-	-	-	-	1"	18"	B	F1554GR36	8	SEE DETAIL 13/S2.12
SC6	HSS8X8X1/2	1"	14"	20"	5 1/2"	8 1/2"	1"	18"	B	F1554GR36	6	SEE DETAIL 14/S2.12
SC7	HSS8X4X1/4	3/4"	10"	14"	3 1/2"	4 3/4"	3/4"	12"	B	F1554GR36	4	SEE DETAIL 9/S2.11 & 10/S2.11

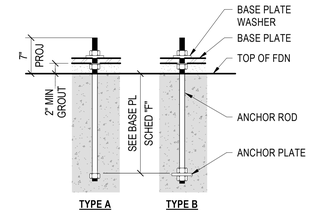

4 TYPICAL SLAB EDGE TURN DOWN DETAIL
N.T.S.

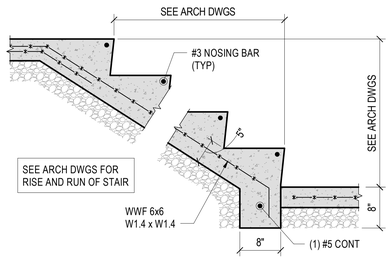

STAIR SECTION

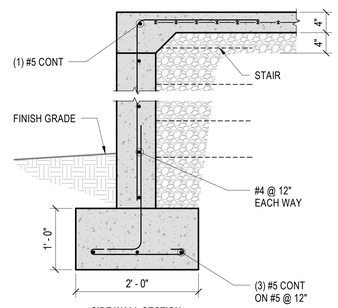

SIDE WALL SECTION

10 TYPICAL CONCRETE STAIR DETAILS
N.T.S.

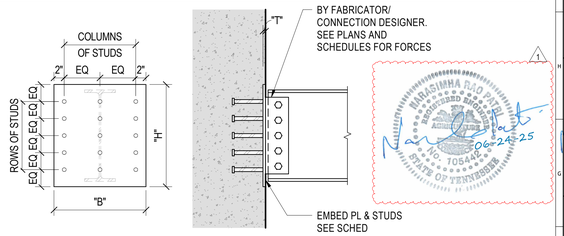

STEEL BEAM EMBED SCHEDULE

BEAM SIZE	PLATE			STUDS (3/4"x6")		
	"T"	"B"	"H"	TOTAL	ROWS	COLS
W8	3/4"	9"	1' - 0"	4	2	2
W12	3/4"	10"	1' - 4"	6	3	2
W14	3/4"	10"	1' - 8"	9	3	3
W16	3/4"	10"	1' - 8"	9	3	3
W18	3/4"	10"	1' - 10"	8	4	2
W21	3/4"	13"	2' - 4"	15	5	3
W24	3/4"	13"	2' - 4"	15	5	3

12 TYPICAL EMBED PLATE DETAILS
N.T.S.

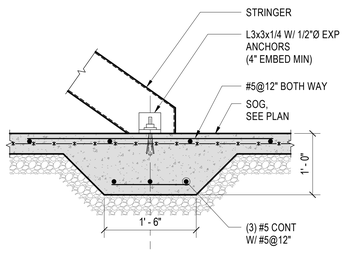

14 TYPICAL THICKENED SLAB @ STAIR
N.T.S.

REBAR SPLICE SCHEDULE

BAR SIZE	SPLICE LENGTH	HOOK LENGTH
#3	18"	9"
#4	24"	11"
#5	30"	14"
#6	36"	17"
#7	42"	19"

CONCRETE BEAM SCHEDULE

MARK	BEAM SIZE	REINFORCEMENT			REMARKS
		BOTTOM	TOP	STIRRUPS	
B1	1' - 0" x1' - 6"	(3) #6	(2) #6	#4 @ 6"	-

MASONRY WALL SCHEDULE

MARK	SIZE	REINFORCEMENT		REMARKS
		VERTICAL	HORIZONTAL	
W12.1	11 5/8"	#5 @ 16" EF STAGGERED	W1.7@16" & BOND BEAM @ BRG OR MAX 14'-0"	

15 SCHEDULES
N.T.S.

COLUMN FOOTING SCHEDULE

MARK	SIZE			REINFORCEMENT		REMARKS
	LENGTH	WIDTH	DEPTH	BOTTOM	TOP	
F3.0	3' - 0"	3' - 0"	1' - 6"	(4) #5 EW	(4) #5 EW	MIN BRG PRESSURE 4000 PSF
F4.0	4' - 0"	4' - 0"	1' - 6"	(5) #5 EW	(5) #5 EW	MIN BRG PRESSURE 4000 PSF
F4.0A	4' - 0"	4' - 0"	1' - 6"	(5) #5 EW	-	MIN BRG PRESSURE 4000 PSF
F5.0	5' - 0"	5' - 0"	1' - 6"	(6) #5 EW	(6) #5 EW	MIN BRG PRESSURE 4000 PSF
F5.0/3.0	5' - 0"	3' - 0"	1' - 6"	(4) #5 LW, (8) #5 SW	(4) #5 LW, (8) #5 SW	MIN BRG PRESSURE 4000 PSF
F6.0/3.5	6' - 0"	3' - 6"	1' - 6"	(5) #5 LW, (10) #5 SW	(5) #5 LW, (10) #5 SW	MIN BRG PRESSURE 4000 PSF
F6.0/4.0	6' - 0"	4' - 0"	1' - 6"	(6) #5 LW, (10) #5 SW	(6) #5 LW, (10) #5 SW	MIN BRG PRESSURE 4000 PSF
F12.0/4.0	12' - 0"	4' - 0"	1' - 6"	(7) #5 LW, (23) #5 SW	(7) #5 LW, (23) #5 SW	MIN BRG PRESSURE 4000 PSF

WALL FOOTING SCHEDULE

MARK	SIZE		FOOTING REINFORCEMENT				REMARKS
			LONGITUDINAL		TRANSVERSE		
	WIDTH	DEPTH	TOP	BOTTOM	TOP	BOTTOM	
WF3.0	3' - 0"	1' - 3"	(3) #5 CONT	(3) #5 CONT	#5 @ 9"	#5 @ 9"	MIN BRG PRESSURE 4000 PSF
WF3.0A	3' - 0"	1' - 6"	(3) #5 CONT	(3) #5 CONT	#5 @ 9"	#5 @ 9"	MIN BRG PRESSURE 4000 PSF
WF3.5	3' - 6"	1' - 6"	(3) #5 CONT	(4) #5 CONT	#5 @ 9"	#5 @ 9"	MIN BRG PRESSURE 4000 PSF
WF5.5	5' - 6"	1' - 6"	(7) #5 CONT	(7) #5 CONT	#6 @ 9"	#6 @ 9"	MIN BRG PRESSURE 6000 PSF

COMMUNITY TECTONICS ARCHITECTS
7610 Gleason Road Knoxville, TN 37919
Ph. (865) 637-8890 www.communitytectonics.com

Upland Design Group
P.O. Box 1026 Crossville, TN 38557
Ph. (931) 484-7541 www.uplanddesigngroup.com

W&O Construction
150 Construction Drive Livingston, TN 38570
Ph. (931) 403-1000 www.wocc.com

PROJECT
JOHNSON HALL RENOVATION - PKG 3
JOHNSON HALL RENOVATION & FOSTER DEMOLITION
SBC Nº 364/011-04-2022CM

OWNER TENNESSEE TECH. UNIVERSITY
LOCATION COOKEVILLE, TN

SEAL
NARASIMHA RAO PAPINENI REGISTERED ARCHITECT AGRICULTURE BUILDING ARCHITECT NO. 105442 STATE OF TENNESSEE
06-24-25
03/28/25

NO.	DESCRIPTION	DATE
1	Addendum #5	6-24-25

JOB NO. 22025
ISSUE DATE 3/28/2025
SHEET TITLE TYPICAL DETAILS & SCHEDULES
DRAWN JE
REVIEW RP
S0.03

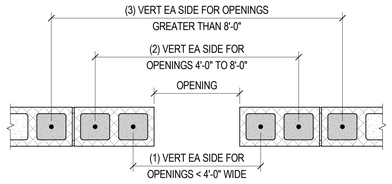

NOTES:
1. ADDITIONAL VERT REINF TO MATCH DESIGNED WALL VERT REINFORCING.
2. GROUT CORES SOLID @ REINF.

1 TYPICAL VERTICAL REBAR AT CMU OPENING
N.T.S.

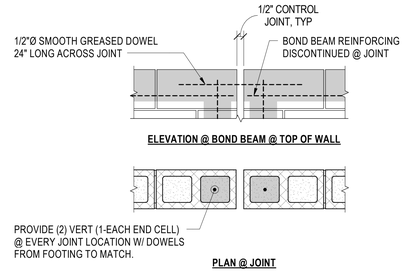

NOTES:
1. SEE ARCH DWGS, FOR SIZE AND LOCATION (30'-0" MAX SPACING)
2. ADDITIONAL VERT REINF TO MATCH DESIGNED WALL VERT REINFORCING.
3. GROUT CORES SOLID @ REINF.

2 TYPICAL CONTROL JOINT DETAIL
N.T.S.

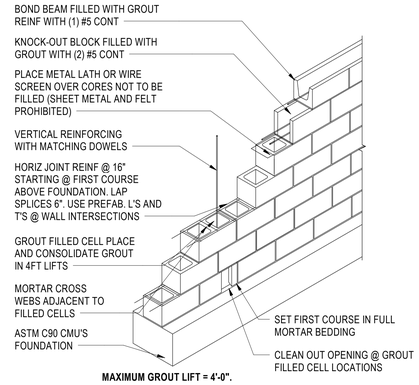

3 TYPICAL CMU MASONRY DETAIL
N.T.S.

Consulting Engineers
630 Southgate Avenue - Suite C
Nashville, Tennessee 37203
(615) 726-2902 Phone
www.loganpatriengineering.com
LPE Job No.: 23028

MASONRY BOND BEAM HEADER SCHEDULE FOR 12" CMU WALL

OPENING SPAN	BEAM DEPTH "D"	REINFORCEMENT		
		TOP	BOTTOM	TIES
8" TO 4'-0"	8"	-	#5	-
4'-1" TO 8'-0"	16"	#5	#5	-
8'-1" TO 10'-0"	24"	#6	#6	#3 @ 8"

MASONRY BOND BEAM HEADER SCHEDULE FOR 8" CMU WALL

OPENING SPAN	BEAM DEPTH "D"	REINFORCEMENT		
		TOP	BOTTOM	TIES
8" TO 4'-0"	8"	-	#5	-
4'-1" TO 8'-0"	16"	#5	#5	#3 @ 8"
8'-1" TO 10'-0"	24"	#6	#6	#3 @ 8"
10'-1" TO 12'-0"	24"	#6	(2) #6	#3 @ 8"

NOTES:
1. OPENINGS LESS THAN 8" DO NOT REQUIRE BOND BEAMS.
2. 8" MINIMUM BEARING AT EACH END OF BOND BEAM.
3. PROVIDE (1) #5 VERT FROM FTG TO TOP OF WALL AT EACH BOND BEAM BEARING LOCATION.
4. FOR LOOSE LAID BRICK ANGLE, SEE 10/S0.04

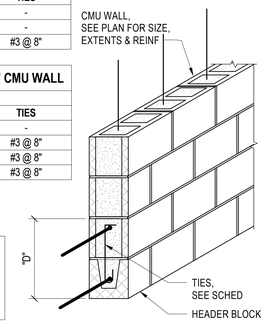

4 TYPICAL MASONRY BOND BEAM HEADER DETAIL
N.T.S.

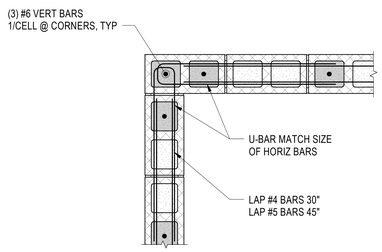

CORNER

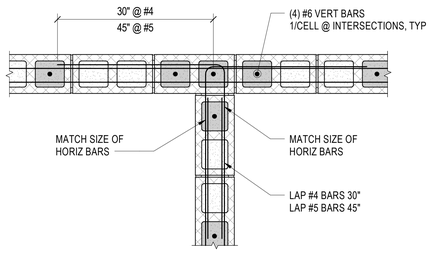

INTERSECTION

5 TYPICAL CMU CORNER AND INTERSECTION DETAILS
N.T.S.

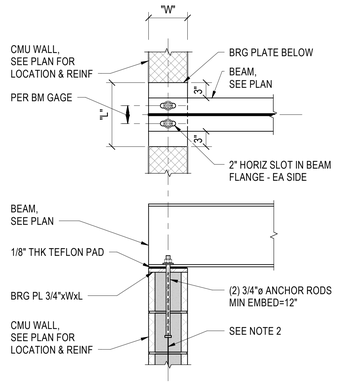

PERPENDICULAR SLIP

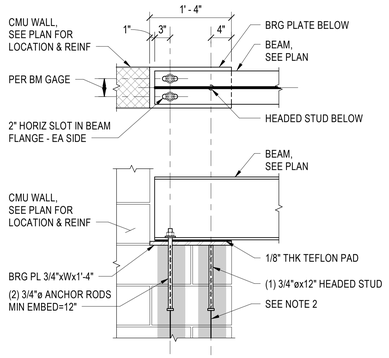

PARALLEL SLIP

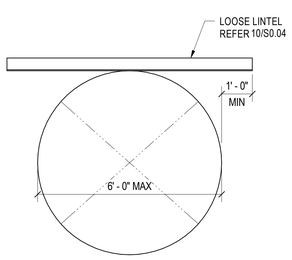

NOTE: 12" MIN BRG EACH END

9 TYPICAL MASONRY SUPPORT DETAIL @ ROUND OPENING
N.T.S.

LOOSE LINTEL SCHEDULE

SPAN	ANGLE SIZE
UP THRU 6' - 0"	L5x5x3/8
6' - 1" THRU 10' - 0"	LLV 7x5x3/8 BENT PL

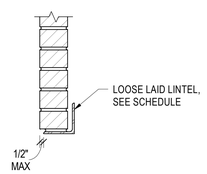

NOTE: 12" MIN BRG EACH END

10 TYPICAL LOOSE LINTEL SCHEDULE AND DETAIL
N.T.S.

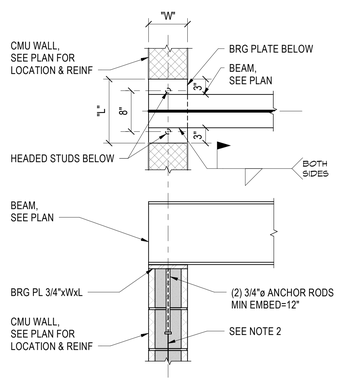

PERPENDICULAR NON-SLIP

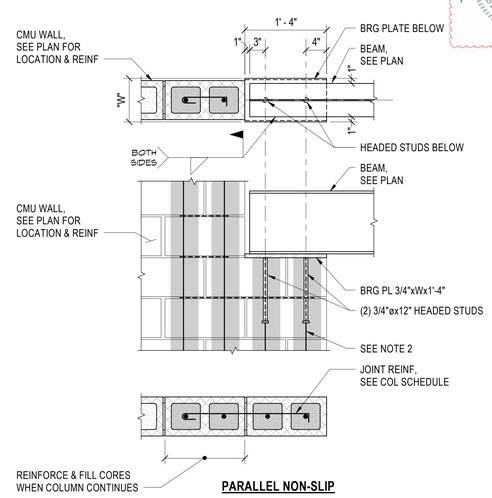

PARALLEL NON-SLIP

NOTES:

1. WHEN BEARING STEEL BEAMS ON MASONRY WALLS, ONE END OF BEAM MUST BE STATIONARY AND THE OTHER MUST SLIP. PROVIDE SLOTTED HOLES IN BEAM FOR EXPANSION WITH TEFLON PAD BETWEEN BEAM AND PLATE AT SLIP END.
2. AT POINTS OF BEAMS BRG FILL 2 CORES W/ GROUT AND PROVIDE (1) #6 CONT IN EACH CORE FROM TOP OF FTG TO BOT OF BRG PL W/ DOWELS FROM FTG TO MATCH.
3. MINIMUM BEARING PLATE WIDTH "W" IS EQUAL TO OR GREATER THAN WIDTH OF WALL.

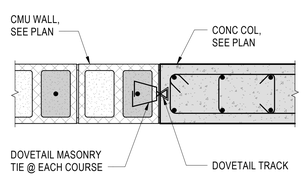

14 TYPICAL CONCRETE COLUMN DETAILS AND SCHEDULE
N.T.S.

15 TYPICAL BEAM TO MASONRY BEARING DETAILS
N.T.S.

COMMUNITY TECTONICS ARCHITECTS
Knoxville, TN 37919 | 7610 Gleason Road | Ph. (865) 637-0890 | www.communitytectonics.com

Upland Design Group
Crossville, TN 38557 | P.O. Box 1026 | Ph. (931) 484-7541 | www.uplanddesigngroup.com

W&O Construction
Livingston, TN 38570 | 150 Construction Drive | Ph. (931) 403-1000 | www.wocc.com

PROJECT
JOHNSON HALL RENOVATION - PKG 3
JOHNSON HALL RENOVATION & FOSTER DEMOLITION
SBC Nº 364/011-04-2022CM

OWNER
TENNESSEE TECH. UNIVERSITY

LOCATION
COOKEVILLE, TN

SEAL

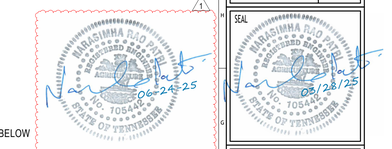

NO.	DESCRIPTION	DATE
1	Addendum #5	6-24-25

JOB NO. 22025
ISSUE DATE 3/28/2025
SHEET TITLE TYPICAL DETAILS & SCHEDULES
DRAWN JE
REVIEW RP
S0.04

Consulting Engineers
630 Southgate Avenue - Suite C
Nashville, Tennessee 37203
(615) 726-2902 Phone
www.loganpatriengineering.com
LPE Job No.: 23028

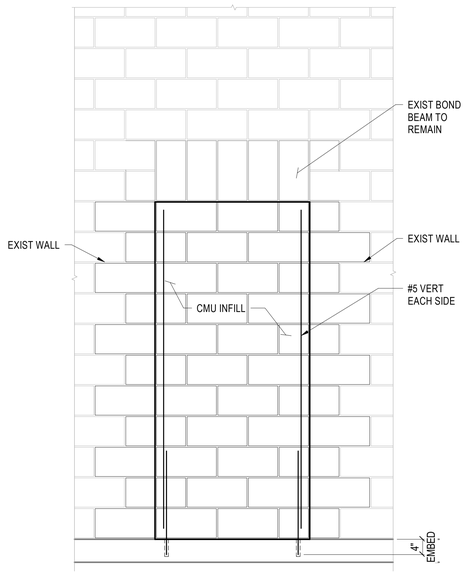

NOTE:

1. EXISTING DOOR TO BE REMOVED AND TO BE REPLACED BY 8" CMU FILL REINF W/ #5 @ 32" GROUT BLOCK SOLID AT REINFORCING.

5 INFILL DETAIL AT EXISTING WALL OPENING
N.T.S.

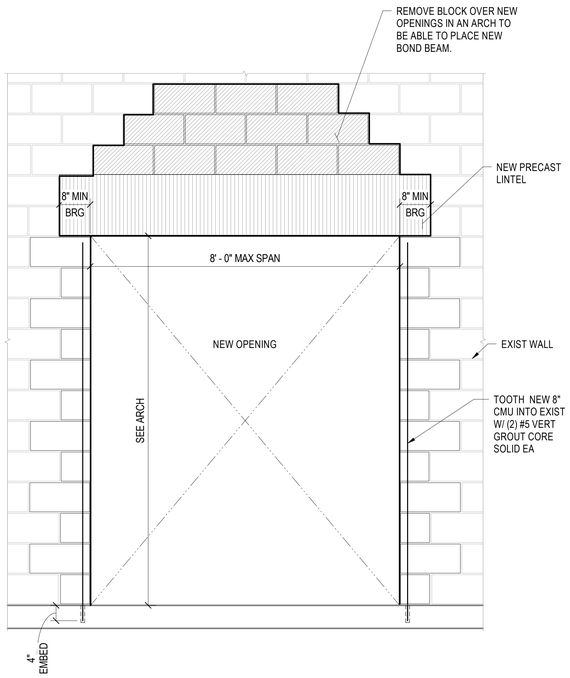

6 NEW CUT OPENING DETAIL AT EXISTING WALL
N.T.S.

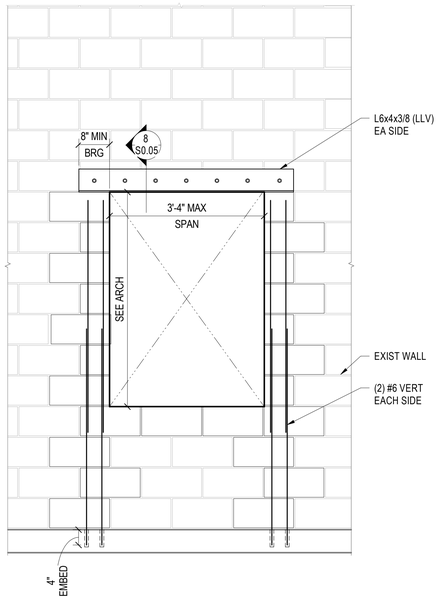

7 NEW WINDOW OPENING DETAIL AT EXISTING WALL
N.T.S.

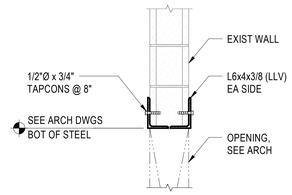

NOTE: 8" MIN BRG EA END

8 SECTION AT TOP OF NEW OPENING IN EXISTING WALL
N.T.S.

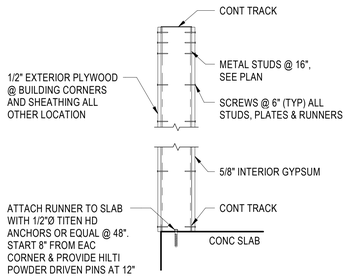

10 TYPICAL STUD WALL SECTION
N.T.S.

DELEGATED DESIGN: ALL LIGHT GAGE FRAMING TO BE DESIGNED BY PROFESSIONAL ENGINEER HIRED BY CONTRACTOR.

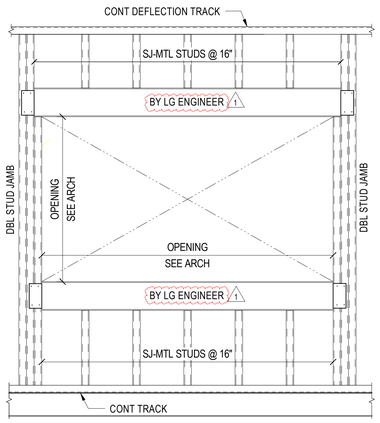

15 TYPICAL PUNCHED WINDOW OPENING ELEVATION
N.T.S.

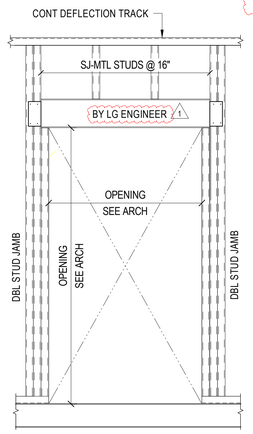

16 TYPICAL PUNCHED DOOR OPENING ELEVATION
N.T.S.

1

COMMUNITY TECTONICS ARCHITECTS
7610 Gleason Road Knoxville, TN 37919
Ph. (865) 637-0890 www.communitytectonics.com

Upland Design Group
P.O. Box 11026 Cookeville, TN 38557
Ph. (931) 484-7541 www.uplanddesigngroup.com

W&O Construction
150 Construction Drive Livingston, TN 38570
Ph. (931) 403-1000 www.wocc.com

PROJECT
JOHNSON HALL RENOVATION - PKG 3
JOHNSON HALL RENOVATION & FOSTER DEMOLITION
SBC Nº 364/011-04-2022CM

LOCATION
COOKEVILLE, TN

OWNER
TENNESSEE TECH. UNIVERSITY

SEAL

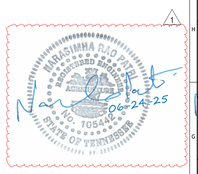

NO.	DESCRIPTION	DATE
1	Addendum #5	6-24-25

JOB NO. 22025

ISSUE DATE 3/28/2025

SHEET TITLE
TYPICAL DETAILS & SCHEDULES

DRAWN JE

REVIEW RP

S0.05

Consulting Engineers
630 Southgate Avenue - Suite C
Nashville, Tennessee 37203
(615) 726-2902 Phone
www.loganpatriengineering.com
LPE Job No.: 23028

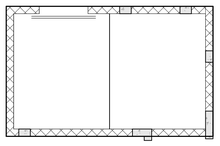

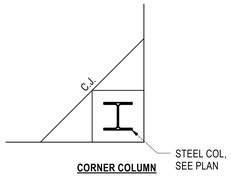

CORNER COLUMN

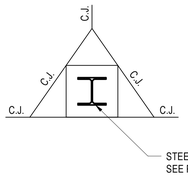

EDGE COLUMN

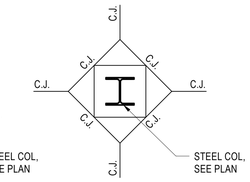

INTERIOR COLUMN

4 TYPICAL CONTROL JOINT DETAILS

N.T.S.

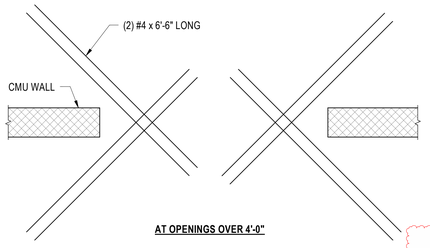

AT OPENINGS OVER 4'-0"

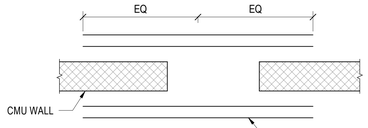

AT OPENINGS UNDER 4'-0"

8 TYPICAL REBAR AT CMU OPENING

N.T.S.

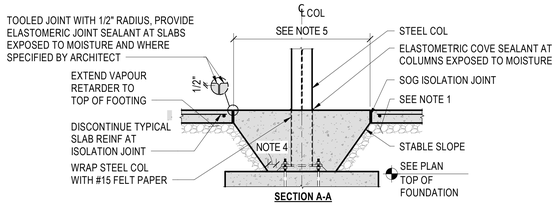

SECTION A-A

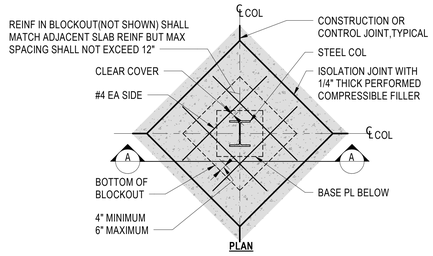

PLAN

NOTES:
1. REFER TO "TYPICAL SLAB-ON-GRADE SUBGRADE PREPARATION" FOR SUBGRADE PREPARATION REQUIREMENTS INCLUDING LOCATION OF VAPOR RETARDER RELATIVE TO SLAB AND GRANULAR BASE AND WHETHER FINE-GRADE GRANULAR MATERIAL IS REQUIRED.
2. REFER TO "TYPICAL CONSTRUCTION AND CONTROL JOINTS - SLAB-ON-GRADE" FOR CONSTRUCTION AND CONTROL JOINT REQUIREMENTS.
3. CONTRACTOR TO COORDINATE REQUIRED SIZE OF BLOCKOUT FOR STRUCTURAL STEEL COLUMNS WITH STEEL ERECTOR. SUBMIT THE DESIRED BLOCKOUT SIZE TO ARCHITECT FOR APPROVAL.
4. BLOCKOUT SHALL BE SIZED TO PROVIDE 3" MINIMUM CONCRETE COVER ALL AROUND COLUMN AND BASE PLATE.
5. BLOCKOUT SLAB FOR INSTALLATION OF COLUMN,PLACE BLOCKOUT AREA AFTER COLUMN IS INSTALLED

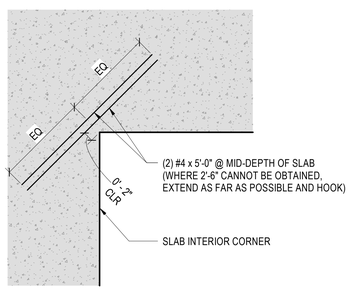

9 REINF @ INTERIOR CORNERS

N.T.S.

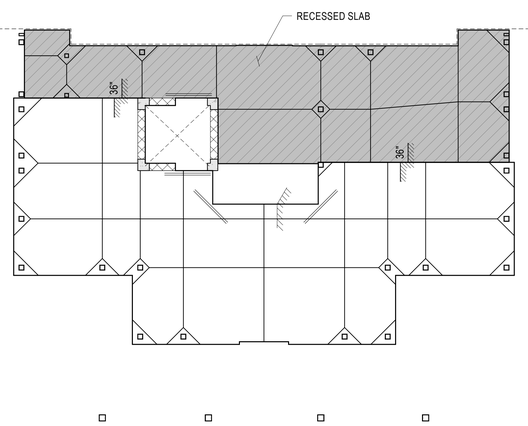

10 FIRST FLOOR SLAB PLAN

1/8" = 1'-0"

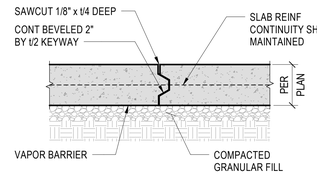

CONSTRUCTION JOINT

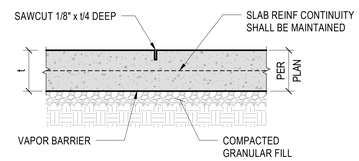

CONTROL JOINT

NOTES:
1. SAW-CUT CONTROL JOINTS TO BE CUT AS SOON AS SURFACE WILL NOT BE TORN, ABRADED, OR OTHERWISE DAMAGED BY CUTTING ACTION. (WITHIN 8 TO 10 HR OF BURNISHING)
2. SPACE CONTROL JOINTS AT 10'-0" MAX FOR INTERIOR SLABS UNO ON PLANS.
3. CONSTRUCTION JOINTS TO BE USED AT END OF EACH POUR.

11 TYPICAL CONSTRUCTION & CONTROL JOINT DETAILS

N.T.S.

12 TYPICAL SLAB ON GRADE BLOCKOUT AROUND STEEL COLUMNS 1

N.T.S.

COMMUNITY TECTONICS ARCHITECTS
7610 Gleason Road
Knoxville, TN 37919
Ph.: (865) 637-0890
www.communitytectonics.com

Upland Design Group
P.O. Box 11026
Cookeville, TN 38557
Ph.: (931) 484-7541
www.uplanddesigngroup.com

W&Q Construction
150 Construction Drive
Livingston, TN 38570
Ph.: (931) 403-1000
www.wqcc.com

PROJECT
JOHNSON HALL RENOVATION - PKG 3
JOHNSON HALL RENOVATION & FOSTER DEMOLITION
SBC Nº 364/011-04-2022CM

LOCATION
COOKEVILLE, TN

OWNER
TENNESSEE TECH. UNIVERSITY

SEAL

NO.	DESCRIPTION	DATE
1	Addendum #5	6-24-25

JOB NO. 22025

ISSUE DATE 3/28/2025

SHEET TITLE
FIRST FLOOR SLAB PLAN

DRAWN JE

REVIEW RP

S0.20

Consulting Engineers
630 Southgate Avenue - Suite C
Nashville, Tennessee 37203
(615) 726-2902 Phone
www.loganpatriengineering.com
LPE Job No.: 23028

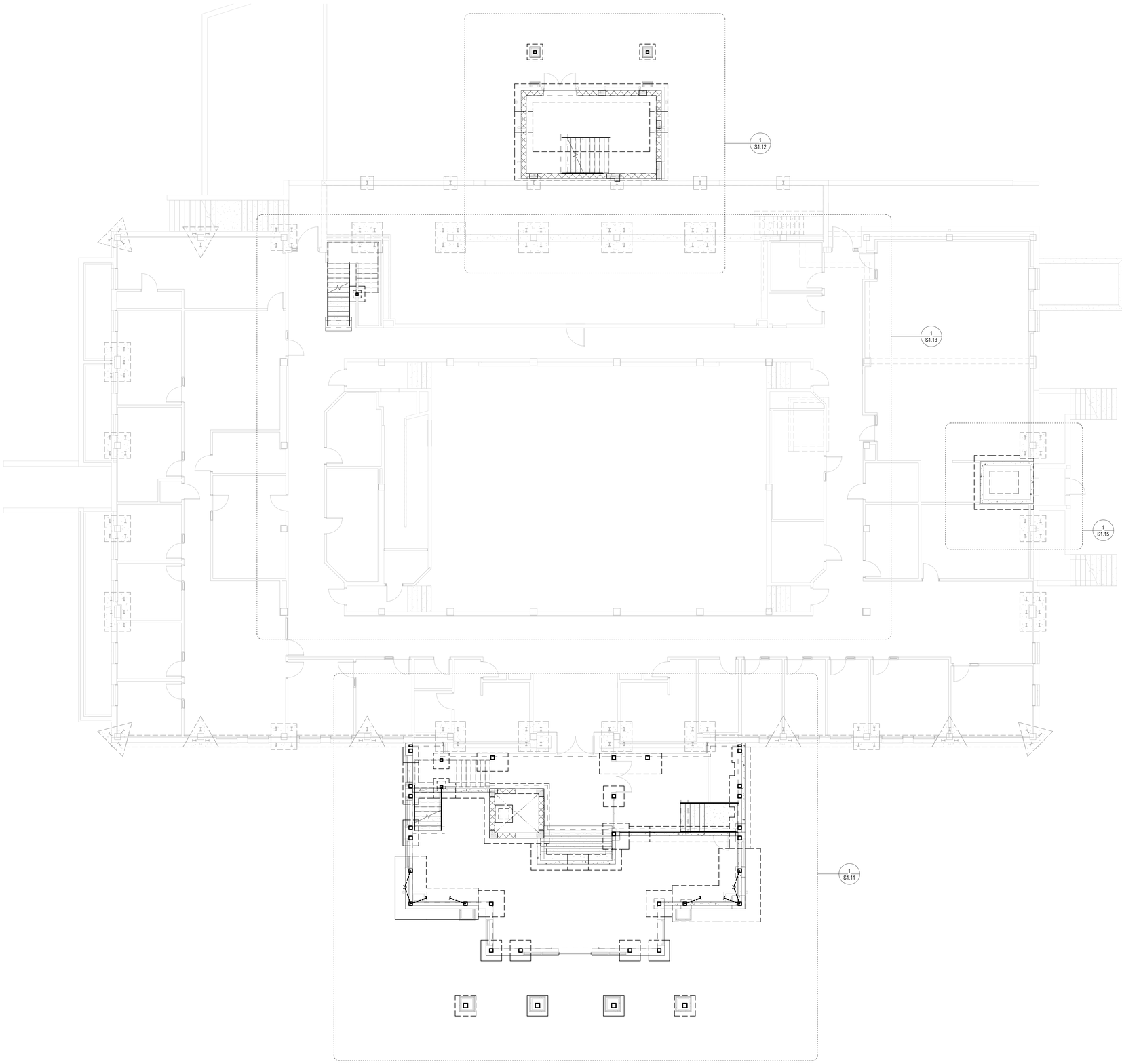

FOUNDATION & FIRST FLOOR NOTES:

1. FIN FLOOR ELEVATION = SEE ARCH
2. 4" CONCRETE SLAB REINFORCED WITH WWF4x4-W1.4xW1.4 ON 15 MIL (MIN) VAPOR BARRIER ON 4" SPECIFIED AGGREGATE FILL. CONFORM TO THE GEOTECHNICAL ENGINEER REQUIREMENTS FOR SUBGRADE PREP.
3. VERIFY ALL DIMENSIONS SHOWN WITH ARCHITECTURAL AND CIVIL DRAWINGS PRIOR TO START OF CONSTRUCTION. SEE ARCHITECTURAL AND CIVIL DRAWINGS FOR DIMENSIONS NOT SHOWN.
4. SLAB CONTROL JOINTS ARE NOT TO EXCEED 225 SQUARE FEET AND ARE TO BE IN AS SQUARE A PATTERN AS POSSIBLE.
5. F#.# = FOOTING MARK
   MC# = MASONRY COLUMN MARK
   SC# = STEEL COLUMN MARK
   WF# = CONT FOOTING MARK
   W# = WALL MARK
   SW# = SHEAR WALL MARK
   GB# = GRADE BEAM MARK

   SEE RELATED SCHEDULE FOR SIZES AND REINFORCEMENT.
6. SEE ARCHITECTURAL/CIVIL DRAWINGS FOR SIDEWALKS, PAVING, AND SITE DETAILS AT BUILDING EXTERIOR UNLESS NOTED OTHERWISE.
7. REFERENCE ALL CONSTRUCTION DOCUMENTS FOR SIZE, EXTENT, AND LOCATION OF CONCRETE CURBS, HOUSEKEEPING PADS, CMU WALLS, BOLLARDS, EDGE ANGLES, SLAB EDGES AND SLAB PENETRATIONS. REINFORCE PER TYPICAL DETAILS.
8. REFER TO FOUNDATION GENERAL NOTE #4 ON S0.01 FOR ALL WORK REQUIRED FOR PROPER PREPARATION OF FOUNDATIONS AND SUBGRADE.
9. SEE ARCH FOR SLOPES TO DRAINS.
10. STEP FOOTING AS REQUIRED AT ELEVATOR PIT, SEE SECTIONS
11. ✱ DENOTES AT BEAM BEARING LOCATIONS, FILL 2 BLOCK CORES WITH GROUT AND REINFORCE WITH (2) #6 FROM TOP OF FOOTING TO 1" CLEAR OF BEAM BEARING. PROVIDE DOWELS FROM FOOTING TO MATCH WITH A 48 BAR DIAMETER LAP.
12. CONTRACTOR TO VERIFY EXISTING FOUNDATIONS, FRAMING AND STRUCTURAL CONDITIONS PRIOR TO THE START OF CONSTRUCTION AND INFORM ANY DISCREPANCY TO EOR.
13. REFER TO ARCHITECTURAL FOR STEEL MEMBERS AT WINDOW AND DOOR HEAD, JAMB, SILL LOCATIONS.
14. GC TO COORDINATE ALL RECESSED FLOOR SLABS WITH ARCHITECTURAL DRAWINGS.
15. CONTRACTOR TO VERIFY TOP OF FOOTING ELEVATION IN THE FIELD PRIOR TO CONSTRUCTION AND COORDINATE NEW FOOTING STEPS WITH EXISTING CONDITIONS. 1

1 OVERALL FOUNDATION & FIRST FLOOR PLAN
1/8" = 1'-0"

COMMUNITY TECTONICS ARCHITECTS
7610 Gleason Road
Knoxville, TN 37919
Ph. (865) 637-0890
www.communitytectonics.com

Upland Design Group
P.O. Box 1326
Crossville, TN 38557
Ph. (931) 484-7541
www.uplanddesigngroup.com

W&O Construction
150 Construction Drive
Livingston, TN 38570
Ph. (931) 403-1000
www.wocc.com

PROJECT
JOHNSON HALL RENOVATION - PKG 3
JOHNSON HALL RENOVATION & FOSTER DEMOLITION
SBC Nº 364/011-04-2022CM

OWNER
TENNESSEE TECH. UNIVERSITY

LOCATION
COOKEVILLE, TN

SEAL
NARASIMHA RAO PAPINENI
REGISTERED ENGINEER
AGRICULTURE
NO. 105442
STATE OF TENNESSEE
06-24-25
08/28/25

NO.	DESCRIPTION	DATE
1	Addendum #5	6-24-25

JOB NO.
22025

ISSUE DATE
3/28/2025

SHEET TITLE
OVERALL FOUNDATION & FIRST FLOOR PLAN

DRAWN
JE

REVIEW
RP

S1.10

Consulting Engineers
630 Southgate Avenue - Suite C
Nashville, Tennessee 37203
(615) 726-2902 Phone
www.loganpatriengineering.com
LPE Job No.: 23028

FOUNDATION & FIRST FLOOR NOTES:

1. SEE S1.10 FOR FOUNDATION & FIRST FLOOR NOTES.

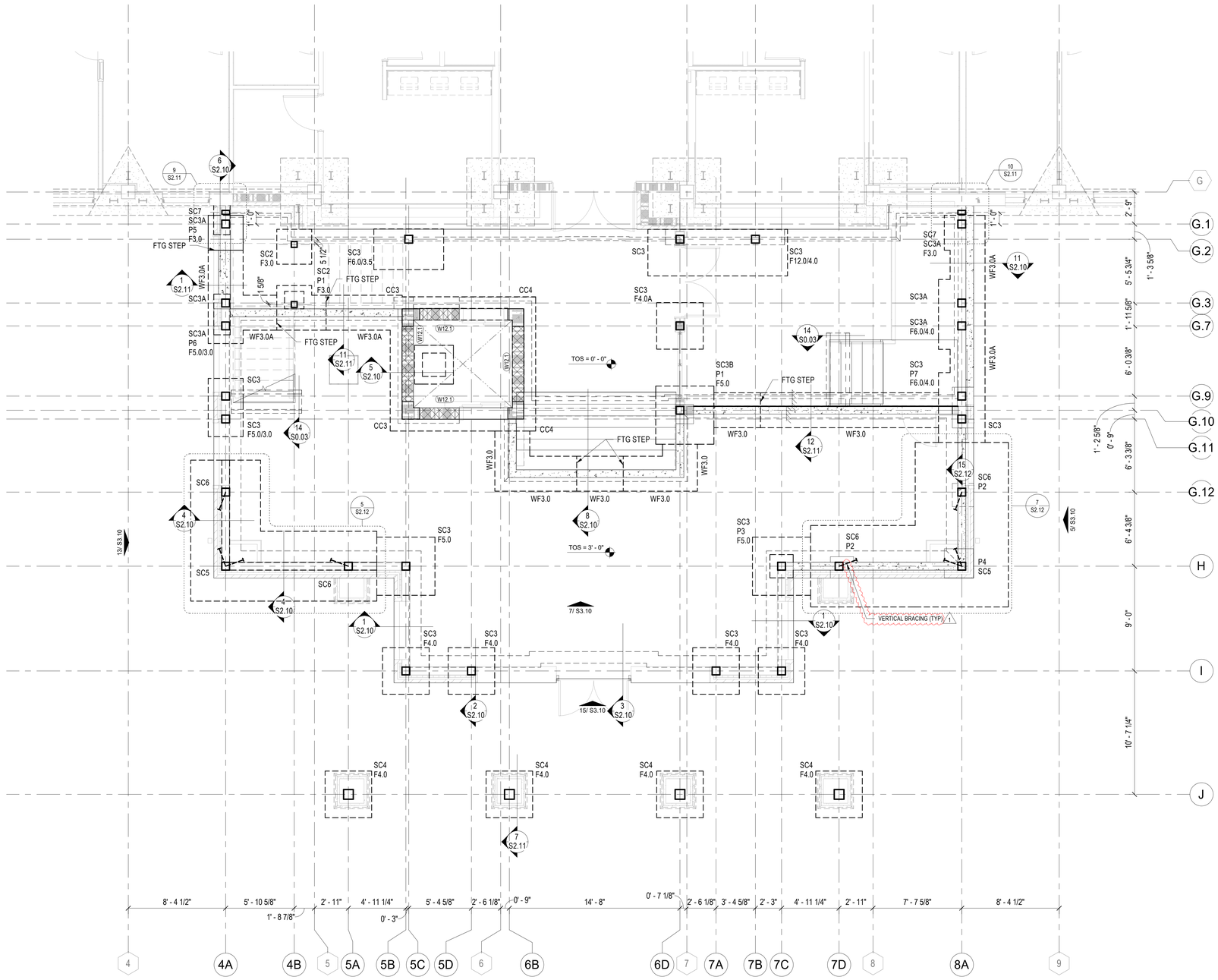

1 FOUNDATION & FIRST FLOOR PLAN - PART A
1/4" = 1'-0"

COMMUNITY TECTONICS ARCHITECTS
7610 Gleason Road, Knoxville, TN 37919
Ph. (865) 637-0890 www.communitytectonics.com

Upland Design Group
P.O. Box 11026, Cookeville, TN 38557
Ph. (931) 484-7541 www.uplanddesigngroup.com

W&O Construction
150 Construction Drive, Livingston, TN 38570
Ph. (931) 403-1000 www.wocc.com

PROJECT
JOHNSON HALL RENOVATION - PKG 3
JOHNSON HALL RENOVATION & FOSTER DEMOLITION
SBC Nº 364/011-04-2022CM
OWNER: TENNESSEE TECH. UNIVERSITY
LOCATION: COOKEVILLE, TN

SEAL
NARASIMHA RAO PATRUNI
REGISTERED ENGINEER
No. 105442
STATE OF TENNESSEE
06-24-25
06/28/25

NO.	DESCRIPTION	DATE
1	Addendum #5	6-24-25

JOB NO. 22025
ISSUE DATE 3/28/2025
SHEET TITLE FOUNDATION & FIRST FLOOR PLAN - PART A
DRAWN JE
REVIEW RP
S1.11

Consulting Engineers
630 Southgate Avenue - Suite C
Nashville, Tennessee 37203
(615) 726-2902 Phone
www.loganpatriengineering.com
LPE Job No.: 23028

FOUNDATION & FIRST FLOOR NOTES:

1. SEE S1.10 FOR FOUNDATION & FIRST FLOOR NOTES.

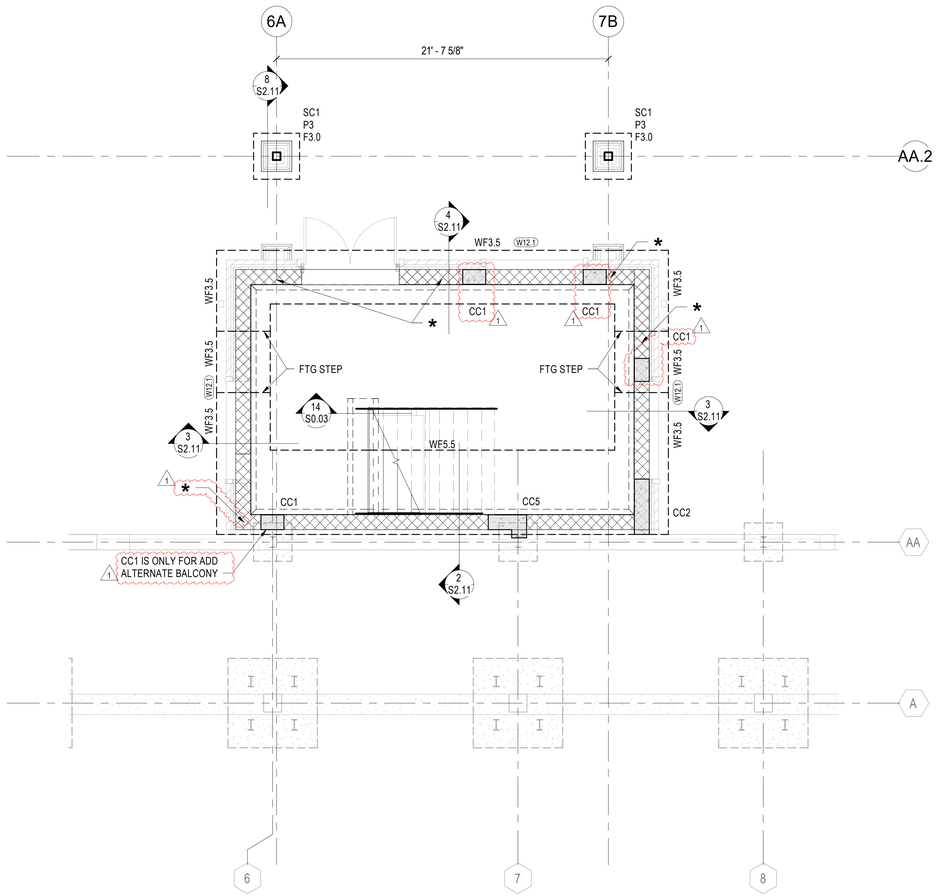

1 FOUNDATION & FIRST FLOOR PLAN - PART B
1/4" = 1'-0"

COMMUNITY TECTONICS ARCHITECTS
7610 Gleason Road
Knoxville, TN 37919
Ph. (865) 637-0890
www.communitytectonics.com

Upland Design Group
P.O. Box 11026
Crossville, TN 38557
Ph. (931) 484-7541
www.uplanddesigngroup.com

W&O Construction
150 Construction Drive
Livingston, TN 38570
Ph. (931) 403-1000
www.wocc.com

PROJECT
JOHNSON HALL RENOVATION - PKG 3
JOHNSON HALL RENOVATION & FOSTER DEMOLITION
SBC Nº 364/011-04-2022CM

OWNER
TENNESSEE TECH. UNIVERSITY

LOCATION
COOKEVILLE, TN

SEAL
NARASIMHA RAO PATTI
REGISTERED ENGINEER
No. 105442
STATE OF TENNESSEE
06-24-25
08/28/25

NO.	DESCRIPTION	DATE
1	Addendum #5	6-24-25

JOB NO.
22025

ISSUE DATE
3/28/2025

SHEET TITLE
FOUNDATION & FIRST FLOOR PLAN - PART B

DRAWN
JE

REVIEW
RP

S1.12

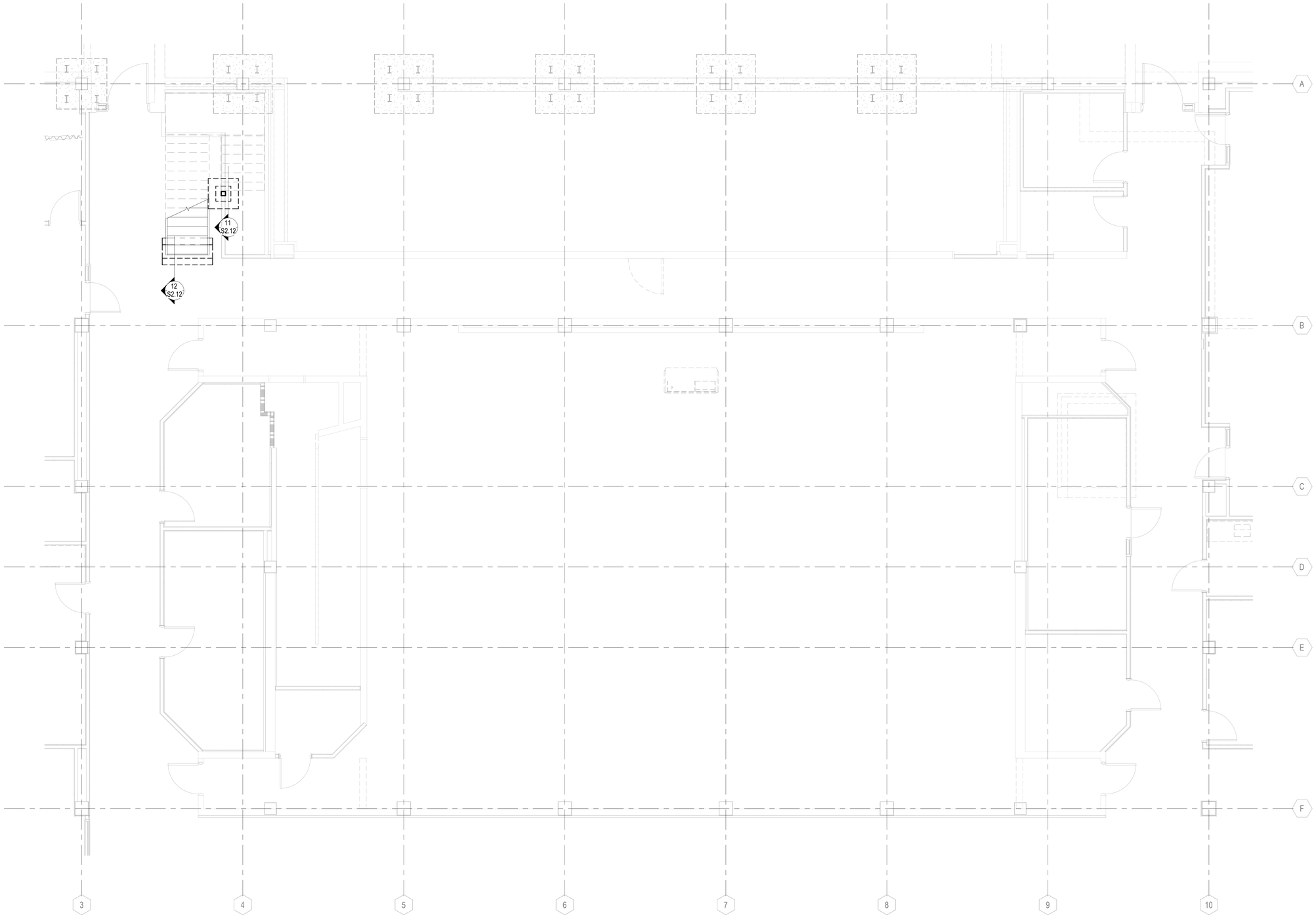

1 FOUNDATION & FIRST FLOOR PLAN - PART C
1/4" = 1'-0"

Consulting Engineers
630 Southgate Avenue - Suite C
Nashville, Tennessee 37203
(615) 726-2902 Phone
www.loganpatriengineering.com
LPE Job No.: 23028

COMMUNITY TECTONICS ARCHITECTS
7610 Gleason Road
Knoxville, TN 37919
Ph. (865) 637-0890
www.communitytectonics.com

Upland Design Group
P.O. Box 11026
Crossville, TN 38557
Ph. (931) 484-7541
www.uplanddesigngroup.com

W&Q Construction
156 Construction Drive
Livingston, TN 38570
Ph. (931) 403-1000
www.wqcc.com

PROJECT
JOHNSON HALL RENOVATION - PKG 3
JOHNSON HALL RENOVATION & FOSTER DEMOLITION
SBC Nº 364/011-04-2022CM

OWNER
TENNESSEE TECH. UNIVERSITY

LOCATION
COOKEVILLE, TN

SEAL
NARASIMHA RAO PATTI
REGISTERED ARCHITECT
No. 108402
STATE OF TENNESSEE
06/24/25

NO.	DESCRIPTION	DATE
1	Addendum #5	6-24-25

JOB NO.
22025

ISSUE DATE
3/28/2025

SHEET TITLE
FOUNDATION & FIRST FLOOR PLAN - PART C

DRAWN
JE

REVIEW
RP

S1.13
1

Consulting Engineers
630 Southgate Avenue - Suite C
Nashville, Tennessee 37203
(615) 726-2902 Phone
www.loganpatriengineering.com
LPE Job No.: 23028

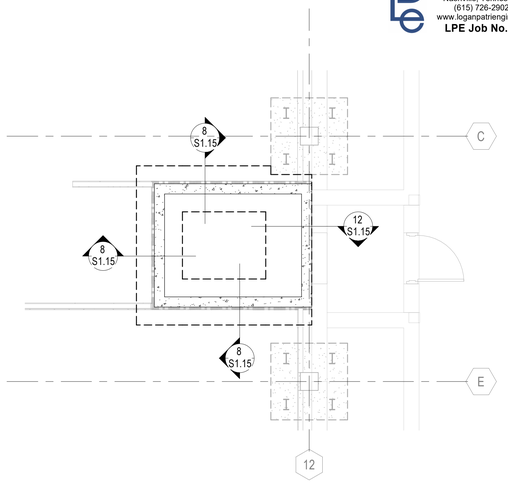

1 FOUNDATION & FIRST FLOOR PLAN - FIRE PUMP ROOM
1/4" = 1'-0"

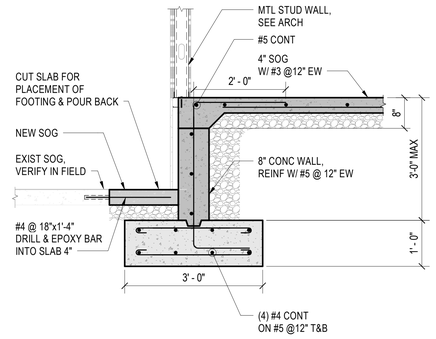

8 FOUNDATION SECTION
3/4" = 1'-0"

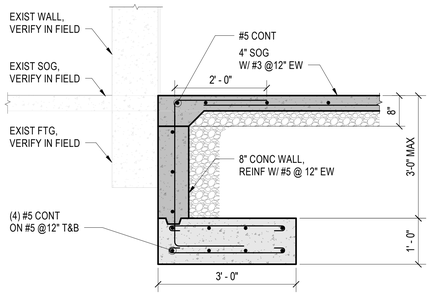

NOTE:
GEOTECH TO VERIFY EXISTING FOUNDATION FOR POTENTIAL UNDERMINING AND SHORING DURING CONSTRUCTION.

12 FOUNDATION SECTION
3/4" = 1'-0"

COMMUNITY TECTONICS ARCHITECTS
7610 Gleason Road
Knoxville, TN 37919
Ph. (865) 637-0890
www.communitytectonics.com

Upland Design Group
P.O. Box 11026
Crossville, TN 38557
Ph. (931) 484-7541
www.uplanddesigngroup.com

W&O Construction
150 Construction Drive
Livingston, TN 38570
Ph. (931) 403-1000
www.wocc.com

PROJECT
JOHNSON HALL RENOVATION - PKG 3
JOHNSON HALL RENOVATION & FOSTER DEMOLITION
SBC Nº 364/011-04-2022CM

OWNER
TENNESSEE TECH. UNIVERSITY

LOCATION
COOKEVILLE, TN

SEAL
NARASIMHA RAO VEMULAPALLI
REGISTERED ENGINEER
NO. 105442
STATE OF TENNESSEE
06/24/25

NO.	DESCRIPTION	DATE
1	Addendum #5	6-24-25

JOB NO.
22025

ISSUE DATE
3/28/2025

SHEET TITLE
ENLARGED PLAN & DETAILS - FIRE PUMP ROOM

DRAWN
JE

REVIEW
RP

S1.15
1

Consulting Engineers
630 Southgate Avenue - Suite C
Nashville, Tennessee 37203
(615) 726-2902 Phone
www.loganpatriengineering.com
LPE Job No.: 23028

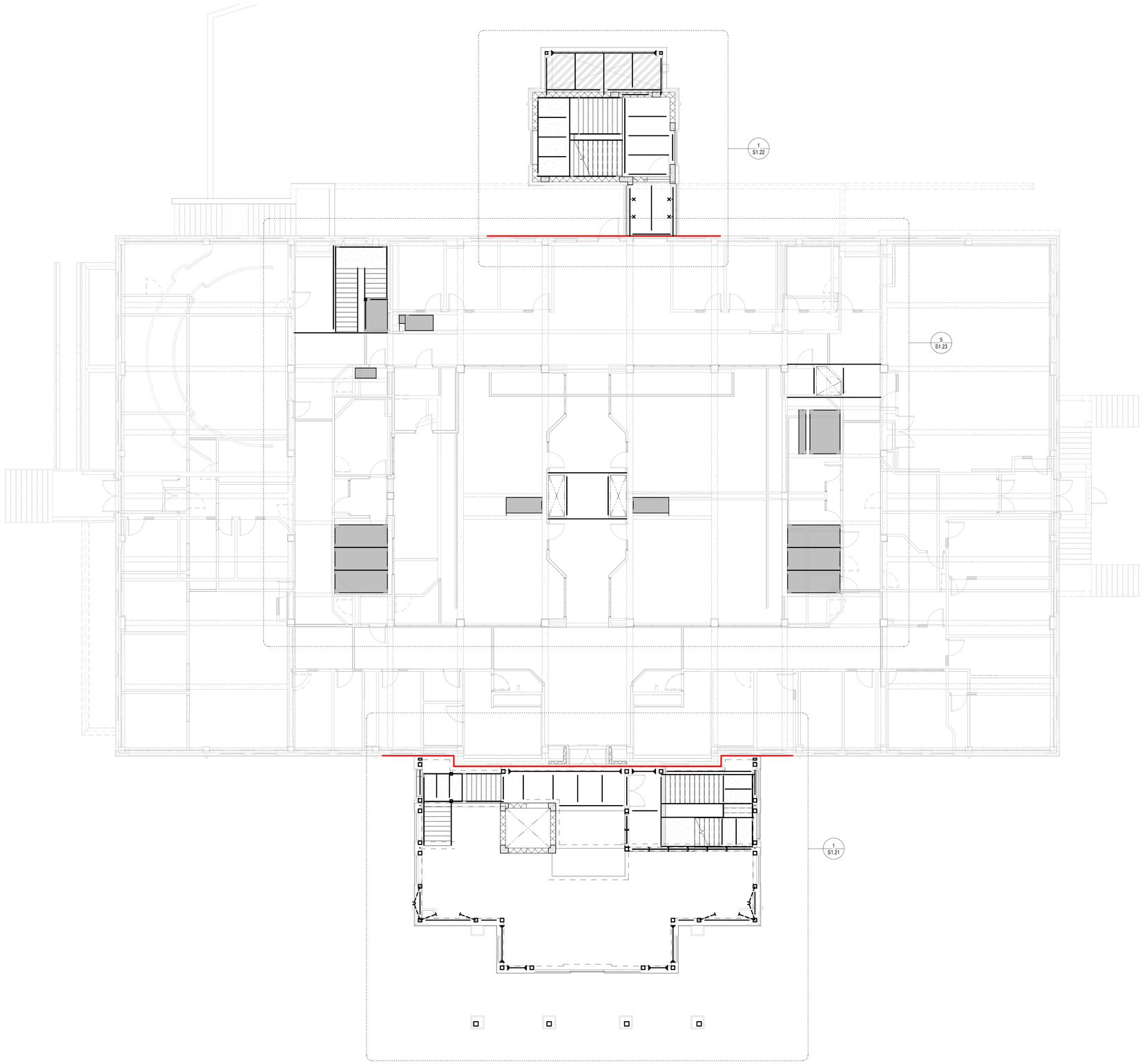

1 OVERALL SECOND FLOOR FRAMING PLAN
1/8" = 1'-0"

SECOND FLOOR AND LOW ROOF FRAMING NOTES:

1. FINISHED FLOOR ELEV = 12'-00" (VERIFY W/ ARCH).
2. TOP OF STEEL ELEVATION = 11'- 7" TYP UNO ON PLAN.
3. 3" NORMAL WEIGHT STRUCTURAL CONCRETE SLAB TOPPING REINF WITH #3 @ 12" EW ON 2", 18 GAGE GALV. COMPOSITE STEEL DECK (5" TOTAL). SHORING IS NOT REQ'D. HOWEVER, A MACHINE SCREEN SHOULD NOT BE USED FOR FINISHING AS IT CAN DAMAGE DECKING. SEE 2/S0.06 FOR DECK ATTACHMENT.
4. 8" NORMAL WEIGHT CONCRETE SLAB REINF WITH #5 @ 10" EW T&B, SEE ARCH FOR SLOPE. (THICKNESS VARIES).
5. ROOF 1 1/2", 20 GA STEEL DECK SEE SPECIFICATIONS. FOR ATTACHMENT DETAIL SEE DETAIL 3/S0.06 .
6. FLOOR LOADS:
   - TOTAL DEAD LOAD = 95 PSF
   - SUPER IMPOSED DEAD LOAD = 20 PSF
   - LIVE LOAD = SEE GENERAL NOTES.

   LOW ROOF LOADS:
   - ROOF DEAD LOAD = 20 PSF
   - ROOF LIVE LOAD = 20 PSF
7. SEE BOND BEAM SCHEDULE 4/S0.04 FOR LINTELS SHOWN OVER MASONRY OPENINGS.
8. CONTRACTOR TO VERIFY EXISTING FRAMING AND STRUCTURAL CONDITIONS PRIOR TO THE START OF CONSTRUCTION AND INFORM ANY DISCREPANCY TO EOR.
9. ALL BEAMS SHALL HAVE 3/4"Øx4" HEADED STUDS @ 36" MAX. (TWO STUD MIN PER BEAM LENGTH).
10. PROVIDE CLOSURE PL'S & 1/4" ANGLES AT ALL COLUMNS FOR DECK SUPPORT.
11. CONTRACTOR TO SUBMIT SHOP DWGS, SIGNED AND SEALED BY ENGINEER LICENSED IN THE STATE OF TENNESSEE,DETAILING ALL CONNECTIONS FOR APPROVAL.
12. DESIGN OF STAIRS, HANDRAILS ARE BY CONTRACTORS ENGINEER.
13. VERIFY ALL DIMENSIONS WITH ARCHITECT. NOTIFY ENGINEER OF ANY DISCREPANCY PRIOR TO FABRICATION.
14. REFER TO ARCH DRAWINGS FOR ALL INTERIOR DIMENSIONS OF MASONRY WALLS. VERIFY ALL DIMENSIONS WITH ARCHITECT PRIOR TO START OF CONSTRUCTION.
15. REFER TO MECHANICAL, PLUMBING AND ELECTRICAL DRAWINGS FOR SIZE AND LOCATION OF ALL SLAB PENETRATIONS SHOWN AND ANY ADDITIONAL OPENINGS REQUIRED.
16. CONSIDER 10 kips FOR BEAM END REACTION AT SERVICE LEVEL UNLESS NOTED OTHERWISE IN PLAN. 1
17. REFER TO ARCHITECTURAL FOR STEEL MEMBERS AT WINDOW AND DOOR HEAD, JAMB, SILL LOCATIONS.
18. ▶ INDICATES MOMENT CONNECTION.
19. VERIFY LOCATION AND WEIGHT OF ALL MECHANICAL UNITS WITH ARCHITECTURAL AND MECHANICAL DRAWINGS.

COMMUNITY TECTONICS ARCHITECTS
7610 Gleason Road, Knoxville, TN 37919
Ph. (865) 637-0890
www.communitytectonics.com

Upland Design Group
P.O. Box 1026, Crossville, TN 38557
Ph. (931) 484-7541
www.uplanddesigngroup.com

W&O Construction
150 Construction Drive, Livingston, TN 38570
Ph. (931) 403-1000
www.wocc.com

PROJECT
JOHNSON HALL RENOVATION - PKG 3
JOHNSON HALL RENOVATION & FOSTER DEMOLITION
SBC Nº 364/011-04-2022CM

OWNER
TENNESSEE TECH. UNIVERSITY

LOCATION
COOKEVILLE, TN

SEAL
MARASIMHA RAO PARVATHALA
REGISTERED ARCHITECT
AUTHORIZED TO PRACTICE ARCHITECTURE
NO. 105445
STATE OF TENNESSEE
03/28/25

MARASIMHA RAO PARVATHALA
REGISTERED ARCHITECT
AUTHORIZED TO PRACTICE ARCHITECTURE
NO. 105445
STATE OF TENNESSEE
06-24-25

NO.	DESCRIPTION	DATE
1	Addendum #5	6-24-25

JOB NO. 22025

ISSUE DATE 3/28/2025

SHEET TITLE
OVERALL SECOND FLOOR FRAMING PLAN

DRAWN JE

REVIEW RP

S1.20

Consulting Engineers
630 Southgate Avenue - Suite C
Nashville, Tennessee 37203
(615) 726-2902 Phone
www.loganpatriengineering.com
LPE Job No.: 23028

SECOND FLOOR AND LOW ROOF FRAMING NOTES:

1. SEE S1.20 FOR SECOND FLOOR AND LOW ROOF FRAMING NOTES.

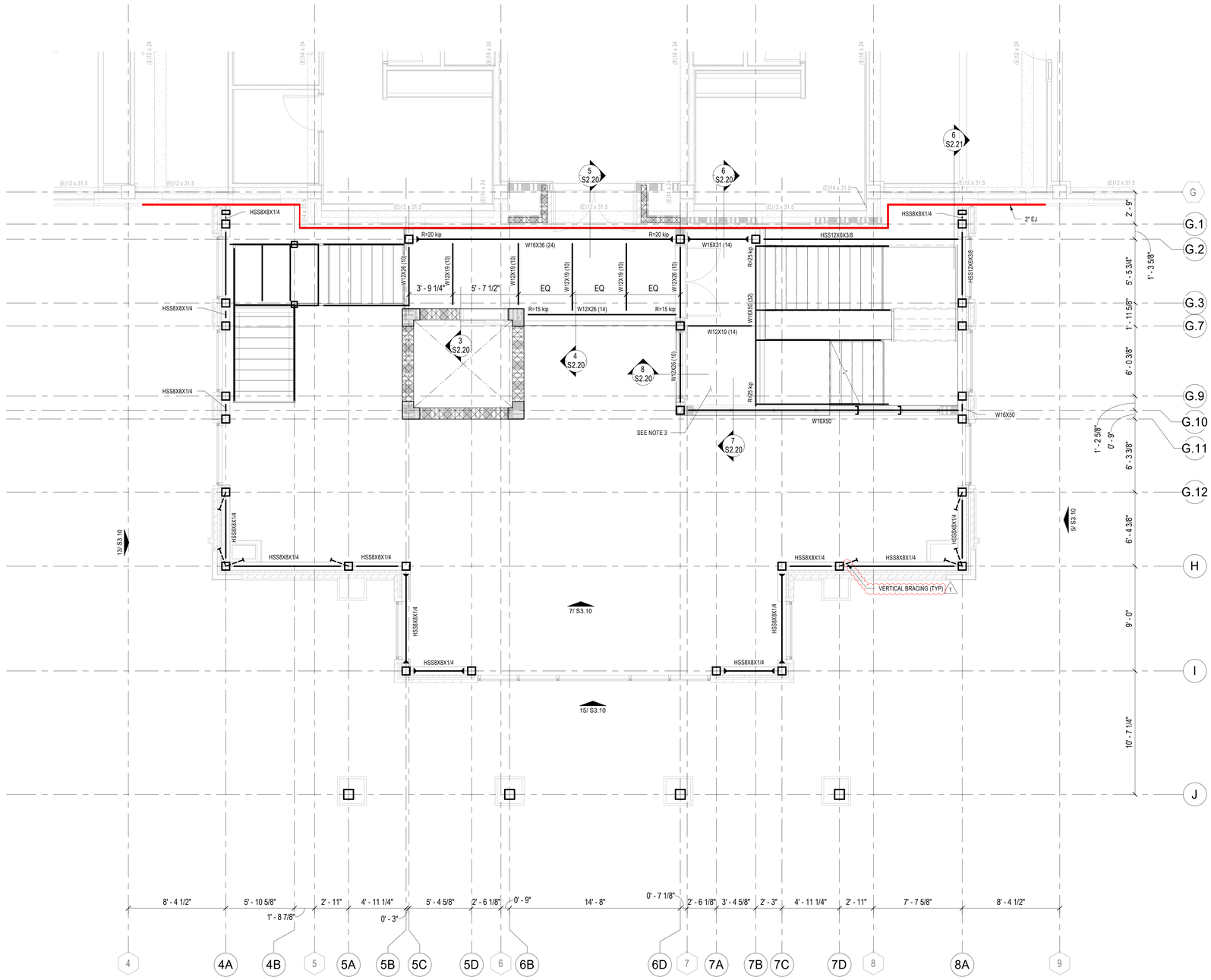

1 SECOND FLOOR FRAMING PLAN - PART A
1/4" = 1'-0"

COMMUNITY TECTONICS ARCHITECTS
7610 Gleason Road Knoxville, TN 37919
Ph. (865) 637-0890 www.communitytectonics.com

Upland Design Group
P.O. Box 11026 Cookeville, TN 38557
Ph. (931) 484-7541 www.uplanddesigngroup.com

W&Q Construction
150 Construction Drive Livingston, TN 38570
Ph. (931) 403-1000 www.wqcc.com

PROJECT
JOHNSON HALL RENOVATION - PKG 3
JOHNSON HALL RENOVATION & FOSTER DEMOLITION
SBC Nº 364/011-04-2022CM

OWNER: TENNESSEE TECH. UNIVERSITY
LOCATION: COOKEVILLE, TN

SEAL
NARASIMHA RAO PATIBANDLA
REGISTERED ENGINEER
AGRICULTURE
NO. 105442
STATE OF TENNESSEE
06-24-25
05/28/25

NO.	DESCRIPTION	DATE
1	Addendum #5	6-24-25

JOB NO. 22025

ISSUE DATE 3/28/2025

SHEET TITLE
SECOND FLOOR FRAMING PLAN - PART A

DRAWN JE
REVIEW RP

S1.21

Consulting Engineers
630 Southgate Avenue - Suite C
Nashville, Tennessee 37203
(615) 726-2902 Phone
www.loganpatriengineering.com
LPE Job No.: 23028

SECOND FLOOR AND LOW ROOF FRAMING NOTES:

1. SEE S1.20 FOR SECOND FLOOR AND LOW ROOF FRAMING NOTES.

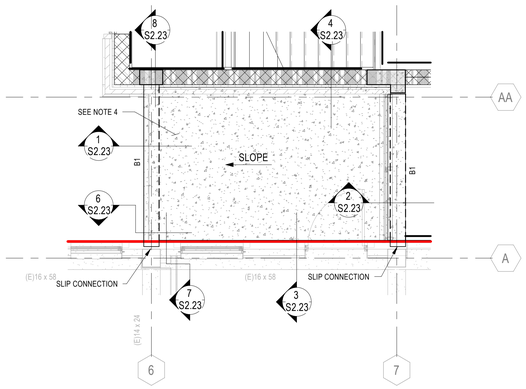

2 ALTERNATE BALCONY
1/4" = 1'-0"

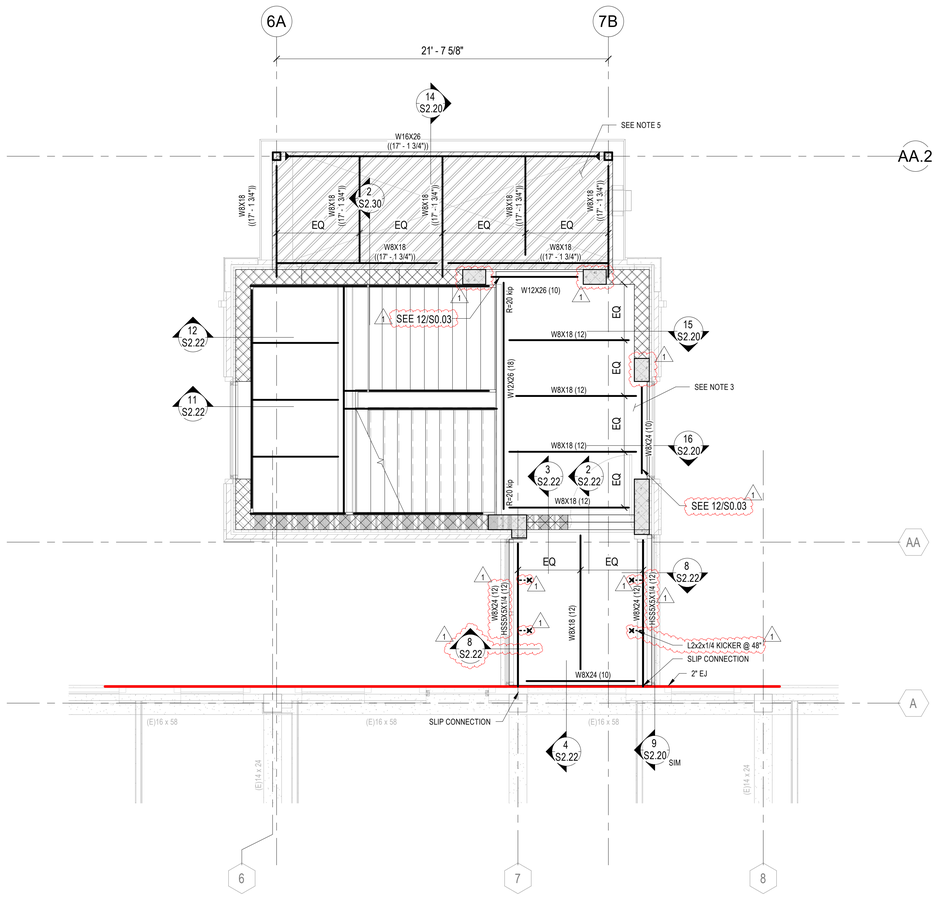

1 SECOND FLOOR AND LOW ROOF FRAMING PLAN - PART B
1/4" = 1'-0"

COMMUNITY TECTONICS ARCHITECTS
7610 Gleason Road
Knoxville, TN 37919
Ph.: (865) 637-0890
www.communitytectonics.com

Upland Design Group
P.O. Box 11026
Cleveville, TN 38557
Ph.: (931) 484-7541
www.uplanddesigngroup.com

W&O Construction
150 Construction Drive
Livingston, TN 38570
Ph.: (931) 403-1000
www.wocc.com

PROJECT
JOHNSON HALL RENOVATION - PKG 3
JOHNSON HALL RENOVATION & FOSTER DEMOLITION
SBC Nº 364/011-04-2022CM

OWNER: TENNESSEE TECH. UNIVERSITY
LOCATION: COOKEVILLE, TN

SEAL

NO.	DESCRIPTION	DATE
1	Addendum #5	6-24-25

JOB NO. 22025

ISSUE DATE 3/28/2025

SHEET TITLE
SECOND FLOOR AND LOW ROOF FRAMING PLAN - PART B

DRAWN JE

REVIEW RP

S1.22

Consulting Engineers
630 Southgate Avenue - Suite C
Nashville, Tennessee 37203
(615) 726-2902 Phone
www.loganpatriengineering.com
LPE Job No.: 23028

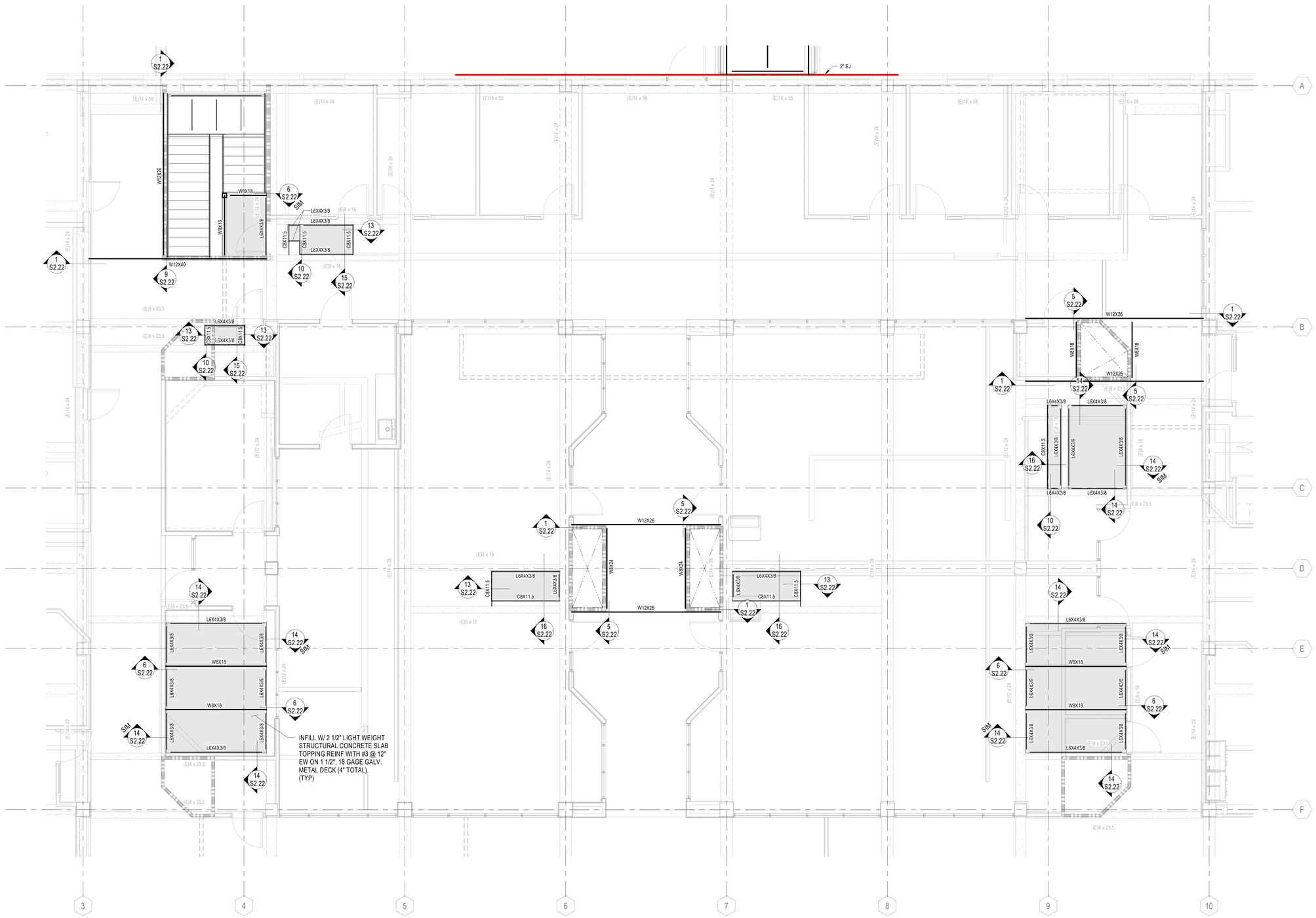

5 SECOND FLOOR FRAMING PLAN - PART C
1/4" = 1'-0"

COMMUNITY TECTONICS ARCHITECTS
7610 Gleason Road
Knoxville, TN 37919
Ph. (865) 637-0890
www.communitytectonics.com

Upland Design Group
P.O. Box 11026
Cookeville, TN 38557
Ph. (931) 484-7541
www.uplanddesigngroup.com

W&O Construction
1561 Construction Drive
Livingston, TN 38570
Ph. (931) 403-1000
www.wocc.com

PROJECT
JOHNSON HALL RENOVATION - PKG 3
JOHNSON HALL RENOVATION & FOSTER DEMOLITION
SBC Nº 364/011-04-2022CM

OWNER
TENNESSEE TECH. UNIVERSITY

LOCATION
COOKEVILLE, TN

SEAL
HARISHIMHA RAO PATIL
REGISTERED ENGINEER
AGENCY ID NO. 10044252
STATE OF TENNESSEE
06/24/25

NO.	DESCRIPTION	DATE
1	Addendum #5	6-24-25

JOB NO.
22025

ISSUE DATE
3/28/2025

SHEET TITLE
SECOND FLOOR FRAMING PLAN - PART C

DRAWN
JE

REVIEW
RP

S1.23

Consulting Engineers
630 Southgate Avenue - Suite C
Nashville, Tennessee 37203
(615) 726-2902 Phone
www.loganpatriengineering.com
LPE Job No.: 23028

THIRD FLOOR FRAMING NOTES:

1. SEE S1.30 FOR THIRD FLOOR FRAMING NOTES.

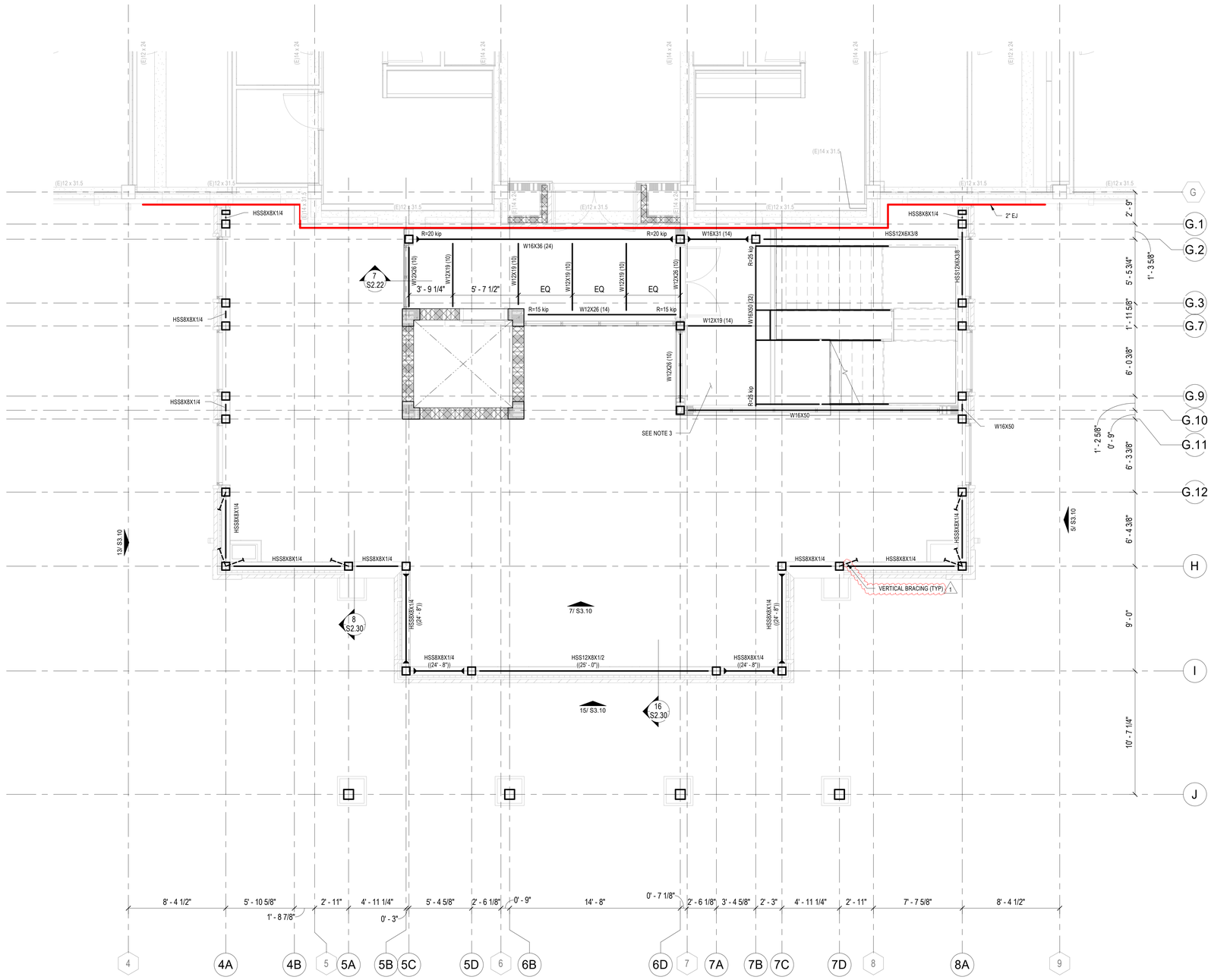

1 THIRD FLOOR FRAMING PLAN - PART A
1/4" = 1'-0"

COMMUNITY TECTONICS ARCHITECTS
7610 Gleason Road, Knoxville, TN 37919
Ph.: (865) 637-0890
www.communitytectonics.com

Upland Design Group
P.O. Box 11026, Crossville, TN 38557
Ph.: (931) 484-7541
www.uplanddesigngroup.com

W&O Construction
150 Construction Drive, Livingston, TN 38570
Ph.: (931) 403-1000
www.wocc.com

PROJECT
JOHNSON HALL RENOVATION - PKG 3
JOHNSON HALL RENOVATION & FOSTER DEMOLITION
SBC Nº 364/011-04-2022CM

OWNER: TENNESSEE TECH. UNIVERSITY
LOCATION: COOKEVILLE, TN

SEAL
NARASIMHA RAO PATIBANDLA
REGISTERED ENGINEER
No. 105442
STATE OF TENNESSEE
06-24-25
06/28/25

NO.	DESCRIPTION	DATE
1	Addendum #5	6-24-25

JOB NO. 22025

ISSUE DATE 3/28/2025

SHEET TITLE
THIRD FLOOR FRAMING PLAN - PART A

DRAWN JE
REVIEW RP

S1.31

Consulting Engineers
630 Southgate Avenue - Suite C
Nashville, Tennessee 37203
(615) 726-2902 Phone
www.loganpatriengineering.com
LPE Job No.: 23028

THIRD FLOOR FRAMING NOTES:

1. SEE S1.30 FOR THIRD FLOOR FRAMING NOTES.

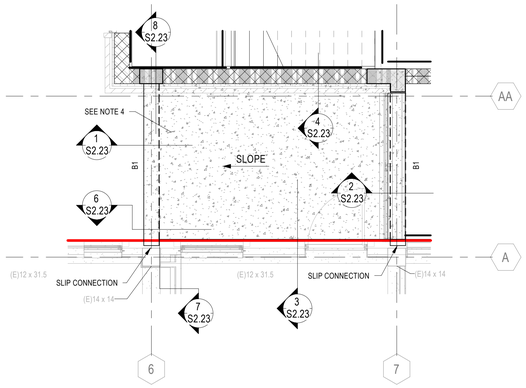

2 ALTERNATE BALCONY
1/4" = 1'-0"

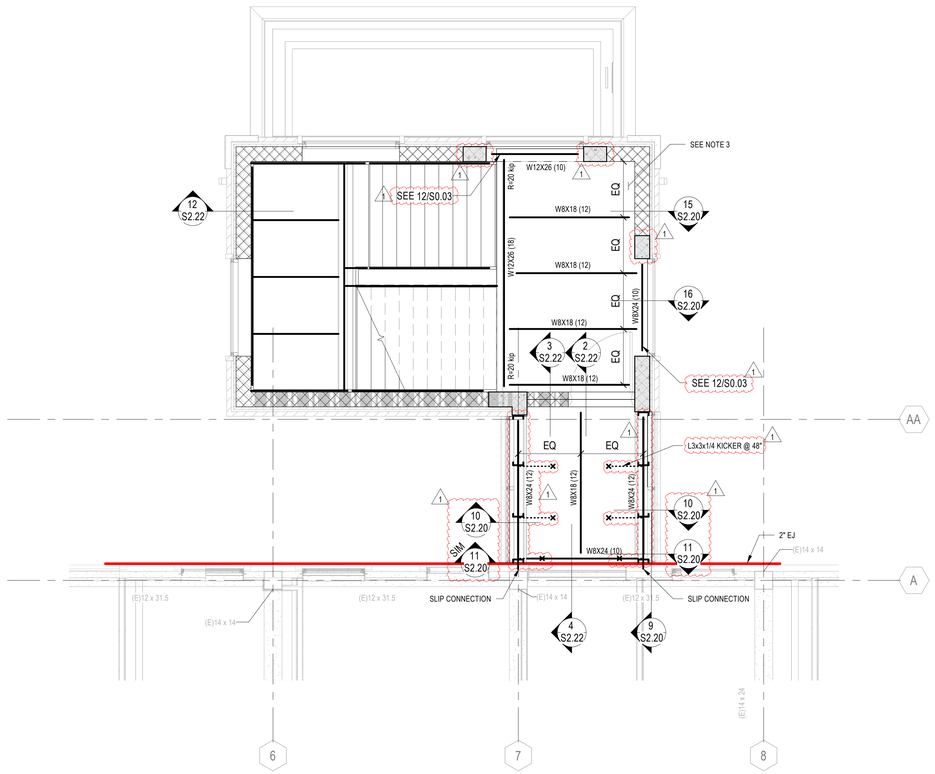

1 THIRD FLOOR FRAMING PLAN - PART B
1/4" = 1'-0"

COMMUNITY TECTONICS ARCHITECTS
7610 Gleason Road
Knoxville, TN 37919
Ph.: (865) 637-0890
www.communitytectonics.com

Upland Design Group
P.O. Box 11026
Crossville, TN 38557
Ph.: (931) 484-7541
www.uplanddesigngroup.com

W&O Construction
150 Construction Drive
Livingston, TN 38570
Ph.: (931) 403-1000
www.wocc.com

PROJECT
JOHNSON HALL RENOVATION - PKG 3
JOHNSON HALL RENOVATION & FOSTER DEMOLITION
SBC Nº 364/011-04-2022CM

OWNER
TENNESSEE TECH. UNIVERSITY

LOCATION
COOKEVILLE, TN

SEAL

NO.	DESCRIPTION	DATE
1	Addendum #5	6-24-25

JOB NO.
22025

ISSUE DATE
3/28/2025

SHEET TITLE
THIRD FLOOR FRAMING PLAN - PART B

DRAWN
JE

REVIEW
RP

S1.32

Consulting Engineers
630 Southgate Avenue - Suite C
Nashville, Tennessee 37203
(615) 726-2902 Phone
www.loganpatriengineering.com
LPE Job No.: 23028

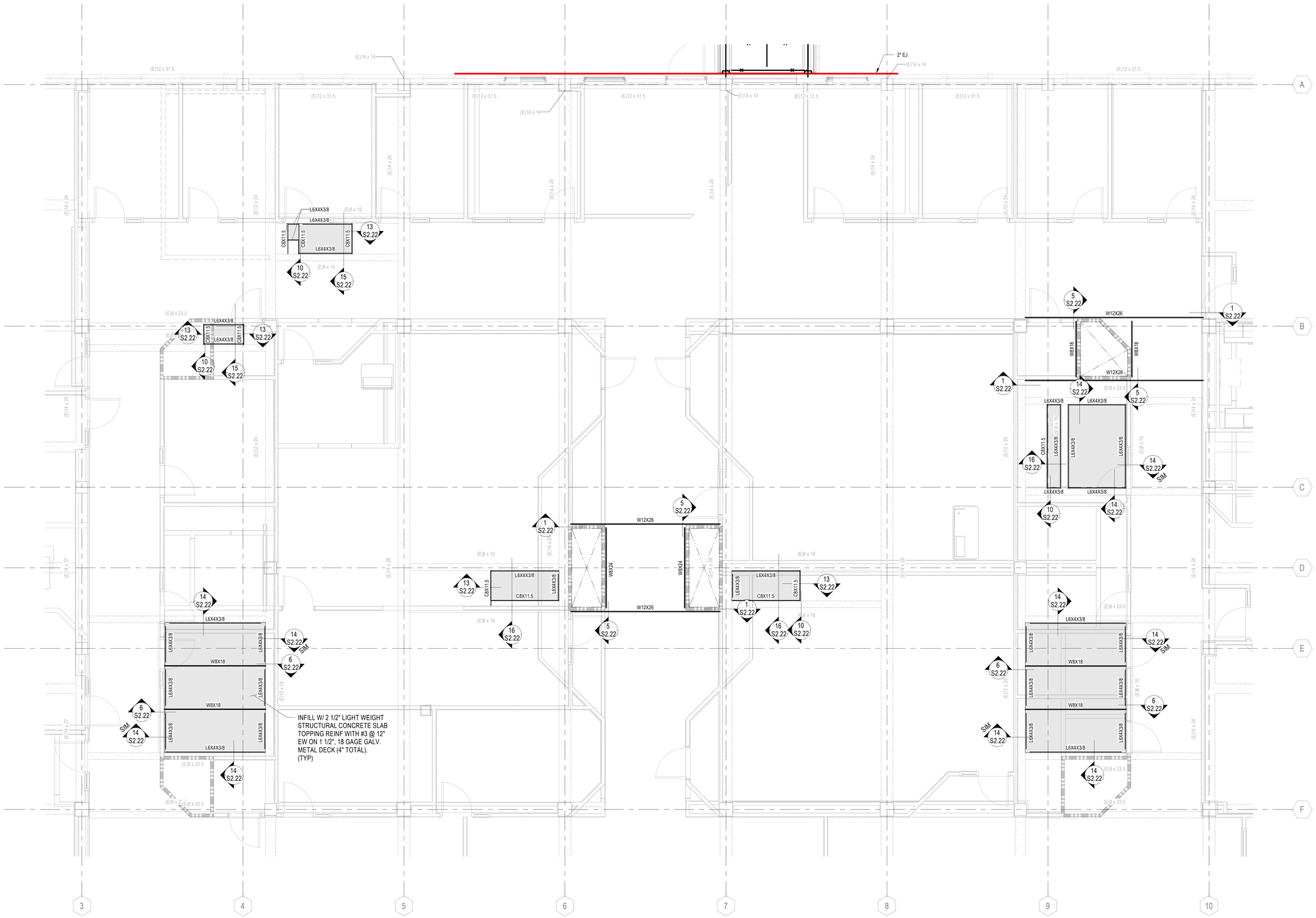

1 THIRD FLOOR FRAMING PLAN - PART C
1/4" = 1'-0"

COMMUNITY TECTONICS ARCHITECTS
7610 Gleason Road
Knoxville, TN 37919
Ph. (865) 637-0890
www.communitytectonics.com

Upland Design Group
P.O. Box 11026
Cookeville, TN 38570
Ph. (931) 484-7541
www.uplanddesigngroup.com

W&O Construction
150 Construction Drive
Livingston, TN 38570
Ph. (931) 403-1000
www.wocc.com

PROJECT
JOHNSON HALL RENOVATION - PKG 3
JOHNSON HALL RENOVATION & FOSTER DEMOLITION
SBC Nº 364/011-04-2022CM

OWNER
TENNESSEE TECH. UNIVERSITY

LOCATION
COOKEVILLE, TN

SEAL
RAMASIMHA RAO PATTIPATI
REGISTERED ENGINEER
AGENCY ID NO. 10044252
STATE OF TENNESSEE
06/24/25

NO.	DESCRIPTION	DATE
1	Addendum #5	6-24-25

JOB NO.
22025

ISSUE DATE
3/28/2025

SHEET TITLE
THIRD FLOOR FRAMING PLAN - PART C

DRAWN
JE

REVIEW
RP

S1.33
1

Consulting Engineers
630 Southgate Avenue - Suite C
Nashville, Tennessee 37203
(615) 726-2902 Phone
www.loganpatriengineering.com
LPE Job No.: 23028

FOURTH FLOOR FRAMING NOTES:

1. SEE S1.40 FOR FOURTH FLOOR FRAMING NOTES.

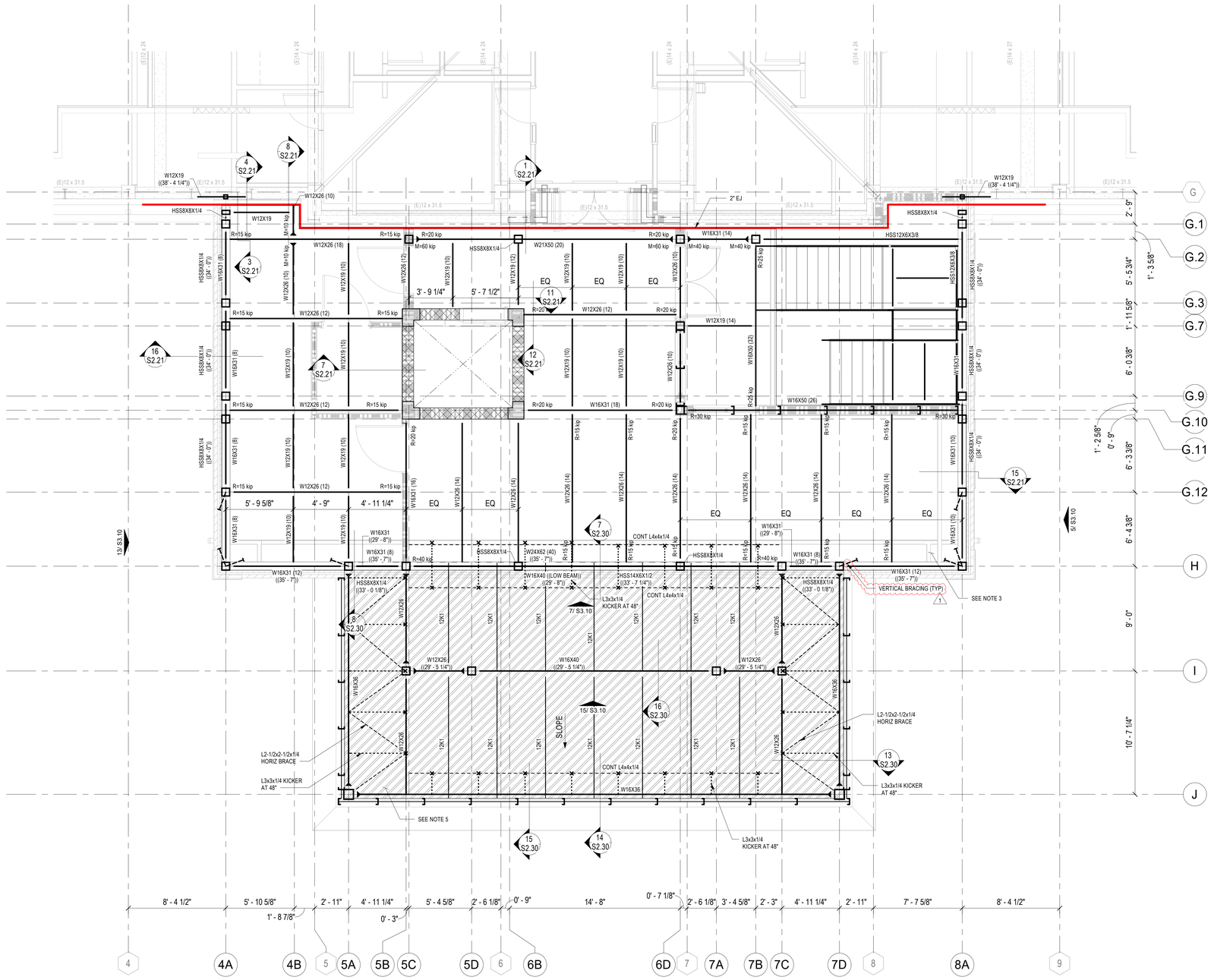

1 FOURTH FLOOR AND LOW ROOF FRAMING PLAN - PART A
1/4" = 1'-0"

COMMUNITY TECTONICS ARCHITECTS
7610 Gleason Road, Knoxville, TN 37919
Ph. (865) 637-0890
www.communitytectonics.com

Upland Design Group
P.O. Box 11026, Cookeville, TN 38557
Ph. (931) 484-7541
www.uplanddesigngroup.com

W&O Construction
150 Construction Drive, Livingston, TN 38570
Ph. (931) 403-1000
www.wocc.com

PROJECT
JOHNSON HALL RENOVATION - PKG 3
JOHNSON HALL RENOVATION & FOSTER DEMOLITION
SBC Nº 364/011-04-2022CM

OWNER: TENNESSEE TECH. UNIVERSITY
LOCATION: COOKEVILLE, TN

SEAL
NARASIMHA RAO PAPINENI
REGISTERED ENGINEER
AGRICULTURE
NO. 105440
STATE OF TENNESSEE
06-24-25
03/28/25

NO.	DESCRIPTION	DATE
1	Addendum #5	6-24-25

JOB NO. 22025

ISSUE DATE 3/28/2025

SHEET TITLE
FOURTH FLOOR AND LOW ROOF FRAMING PLAN - PART A

DRAWN JE
REVIEW RP

S1.41

Consulting Engineers
630 Southgate Avenue - Suite C
Nashville, Tennessee 37203
(615) 726-2902 Phone
www.loganpatriengineering.com
LPE Job No.: 23028

FOURTH FLOOR FRAMING NOTES:

1. SEE S1.40 FOR FOURTH FLOOR FRAMING NOTES.

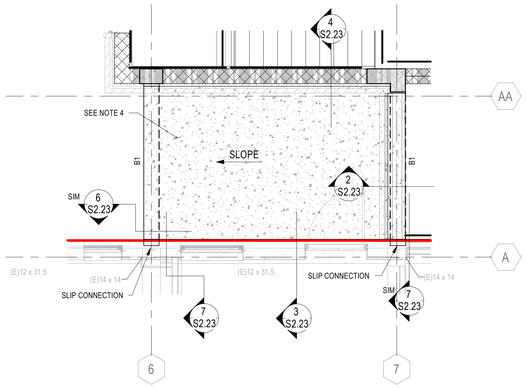

2 ALTERNATE BALCONY
1/4" = 1'-0"

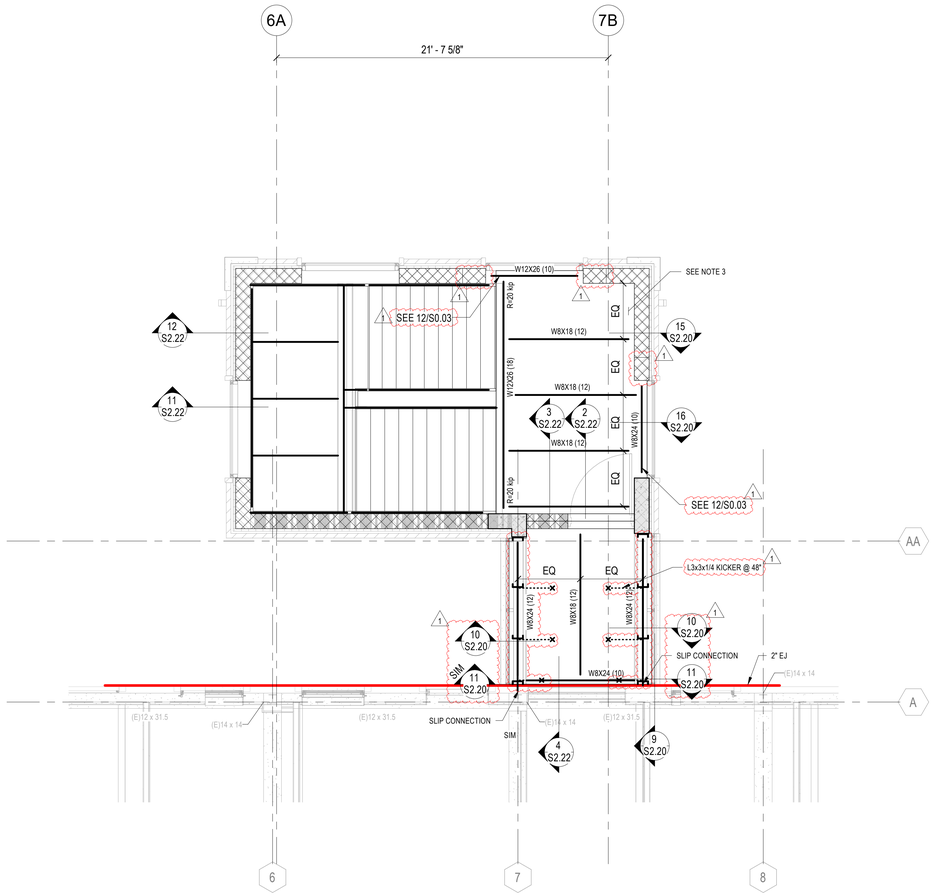

1 FOURTH FLOOR FRAMING PLAN - PART B
1/4" = 1'-0"

COMMUNITY TECTONICS ARCHITECTS
7610 Gleason Road
Knoxville, TN 37919
Ph.: (865) 637-0890
www.communitytectonics.com

Upland Design Group
P.O. Box 11026
Crossville, TN 38557
Ph.: (931) 484-7541
www.uplanddesigngroup.com

W&O Construction
150 Construction Drive
Livingston, TN 38570
Ph.: (931) 403-1000
www.wocc.com

PROJECT
JOHNSON HALL RENOVATION - PKG 3
JOHNSON HALL RENOVATION & FOSTER DEMOLITION
SBC Nº 364/011-04-2022CM

OWNER
TENNESSEE TECH. UNIVERSITY

LOCATION
COOKEVILLE, TN

SEAL

NO.	DESCRIPTION	DATE
1	Addendum #5	6-24-25

JOB NO.
22025

ISSUE DATE
3/28/2025

SHEET TITLE
FOURTH FLOOR FRAMING PLAN - PART B

DRAWN
JE

REVIEW
RP

S1.42

Consulting Engineers
630 Southgate Avenue - Suite C
Nashville, Tennessee 37203
(615) 726-2902 Phone
www.loganpatriengineering.com
LPE Job No.: 23028

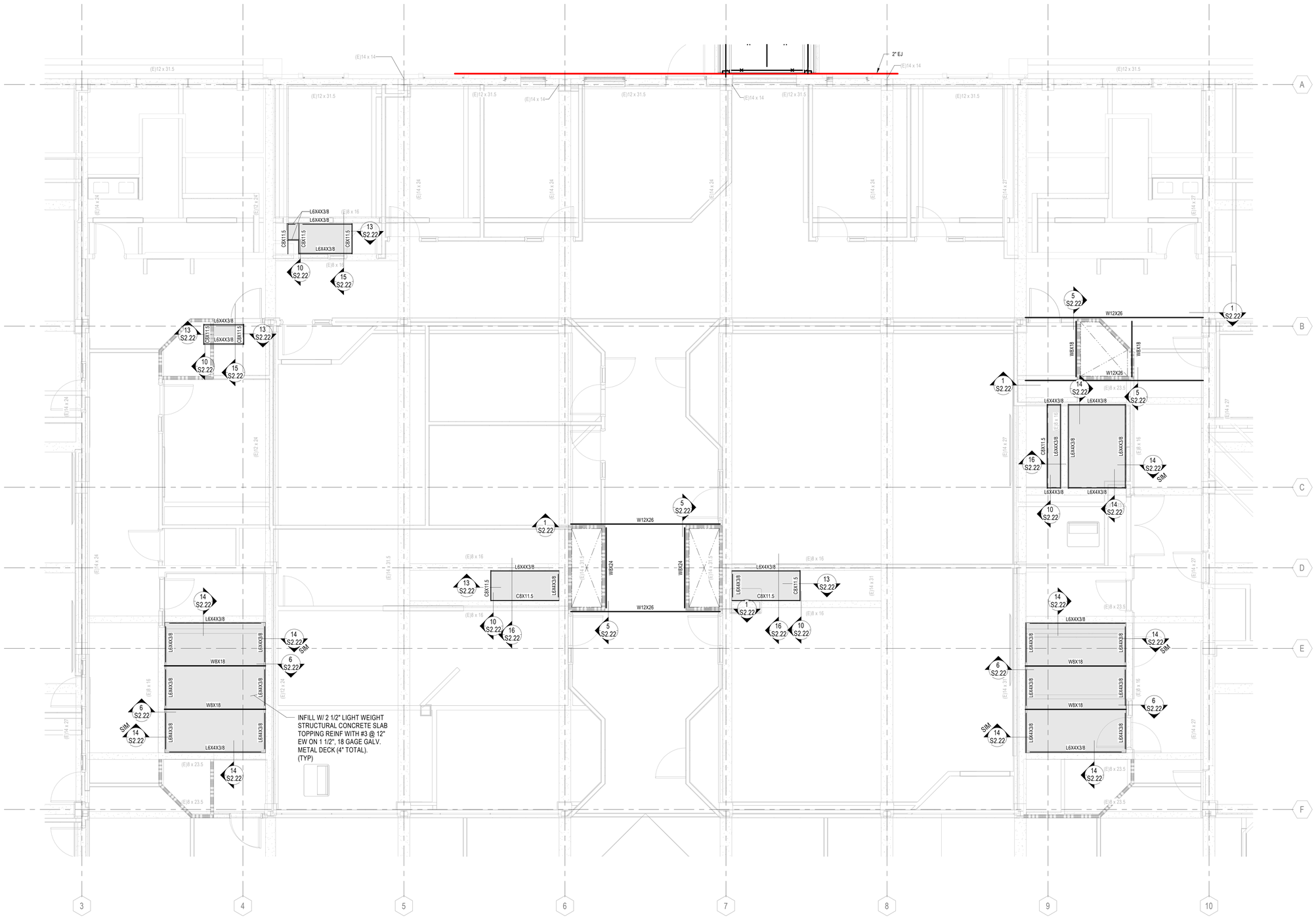

1 FOURTH FLOOR FRAMING PLAN - PART C
1/4" = 1'-0"

COMMUNITY TECTONICS ARCHITECTS
7610 Gleason Road
Knoxville, TN 37919
Ph. (865) 637-0890
www.communitytectonics.com

Upland Design Group
P.O. Box 11026
Cookeville, TN 38557
Ph. (931) 484-7541
www.uplanddesigngroup.com

W&O Construction
150 Construction Drive
Livingston, TN 38570
Ph. (931) 403-1000
www.wocc.com

PROJECT
JOHNSON HALL RENOVATION - PKG 3
JOHNSON HALL RENOVATION & FOSTER DEMOLITION
SBC Nº 364/011-04-2022CM

OWNER
TENNESSEE TECH. UNIVERSITY

LOCATION
COOKEVILLE, TN

SEAL
RAMASIMHA RAO PATTIPATI
REGISTERED ENGINEER
AGENCY No. 104422
STATE OF TENNESSEE
06/24/25

NO.	DESCRIPTION	DATE
1	Addendum #5	6-24-25

JOB NO.
22025

ISSUE DATE
3/28/2025

SHEET TITLE
FOURTH FLOOR FRAMING PLAN - PART C

DRAWN
JE

REVIEW
RP

S1.43

Consulting Engineers
630 Southgate Avenue - Suite C
Nashville, Tennessee 37203
(615) 726-2902 Phone
www.loganpatriengineering.com
LPE Job No.: 23028

HIGH ROOF FRAMING NOTES:

1. SEE S1.50 FOR HIGH ROOF FRAMING NOTES.

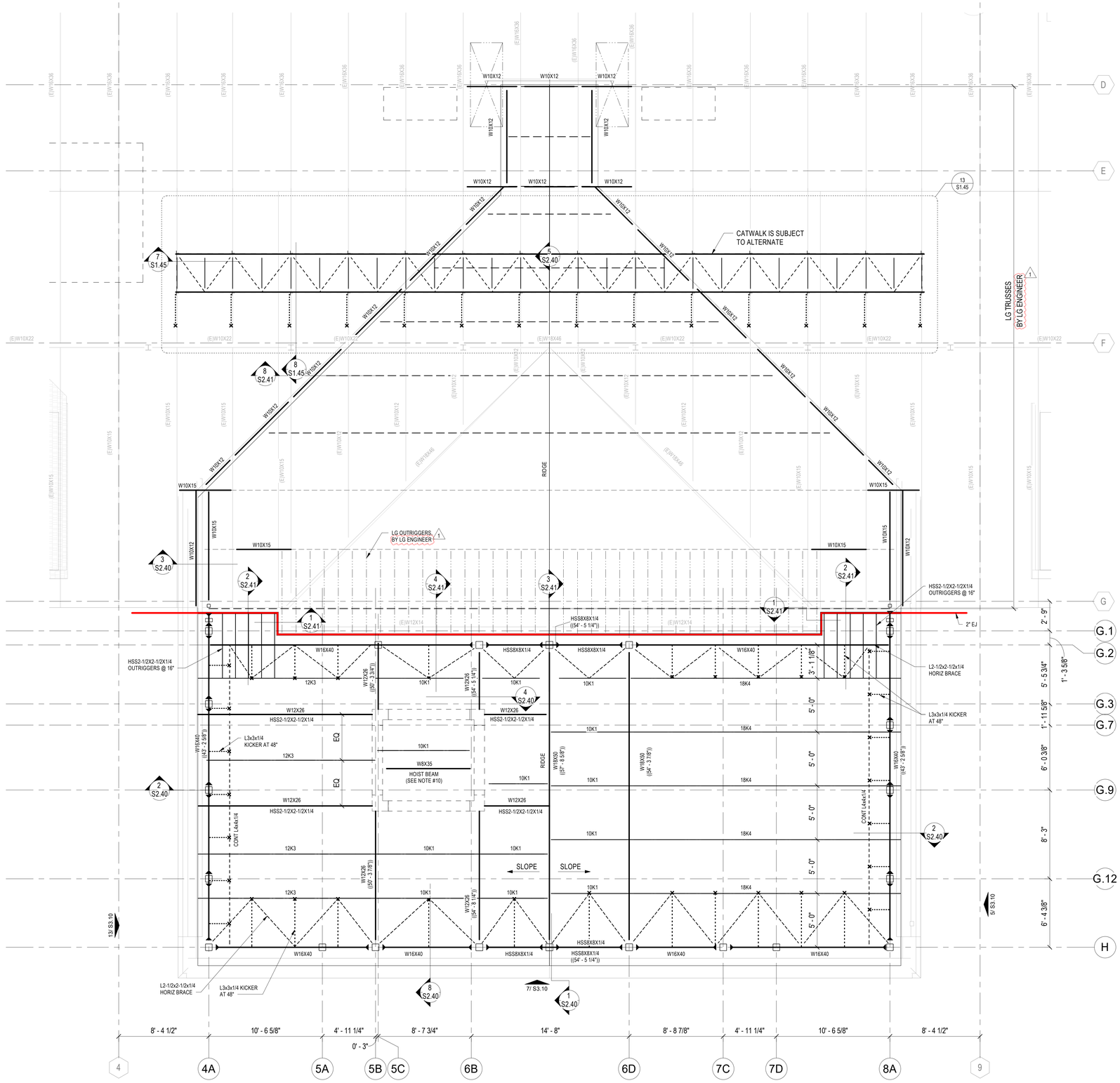

1 ROOF FRAMING PLAN - PART A
1/4" = 1'-0"

COMMUNITY TECTONICS ARCHITECTS
7610 Gleason Road, Knoxville, TN 37919
Ph. (865) 637-0890, www.communitytectonics.com

Upland Design Group
P.O. Box 11026, Crossville, TN 38557
Ph. (931) 484-7541, www.uplanddesigngroup.com

W&O Construction
150 Construction Drive, Livingston, TN 38570
Ph. (931) 403-1000, www.wocc.com

PROJECT
JOHNSON HALL RENOVATION - PKG 3
JOHNSON HALL RENOVATION & FOSTER DEMOLITION
SBC Nº 364/011-04-2022CM

OWNER: TENNESSEE TECH. UNIVERSITY
LOCATION: COOKEVILLE, TN

SEAL

NO.	DESCRIPTION	DATE
1	Addendum #5	6-24-25

JOB NO. 22025

ISSUE DATE 3/28/2025

SHEET TITLE: ROOF FRAMING PLAN - PART A

DRAWN: JE
REVIEW: RP

S1.51

Consulting Engineers
630 Southgate Avenue - Suite C
Nashville, Tennessee 37203
(615) 726-2902 Phone
www.loganpatriengineering.com
LPE Job No.: 23028

HIGH ROOF FRAMING NOTES:

1. SEE S1.50 FOR HIGH ROOF FRAMING NOTES.

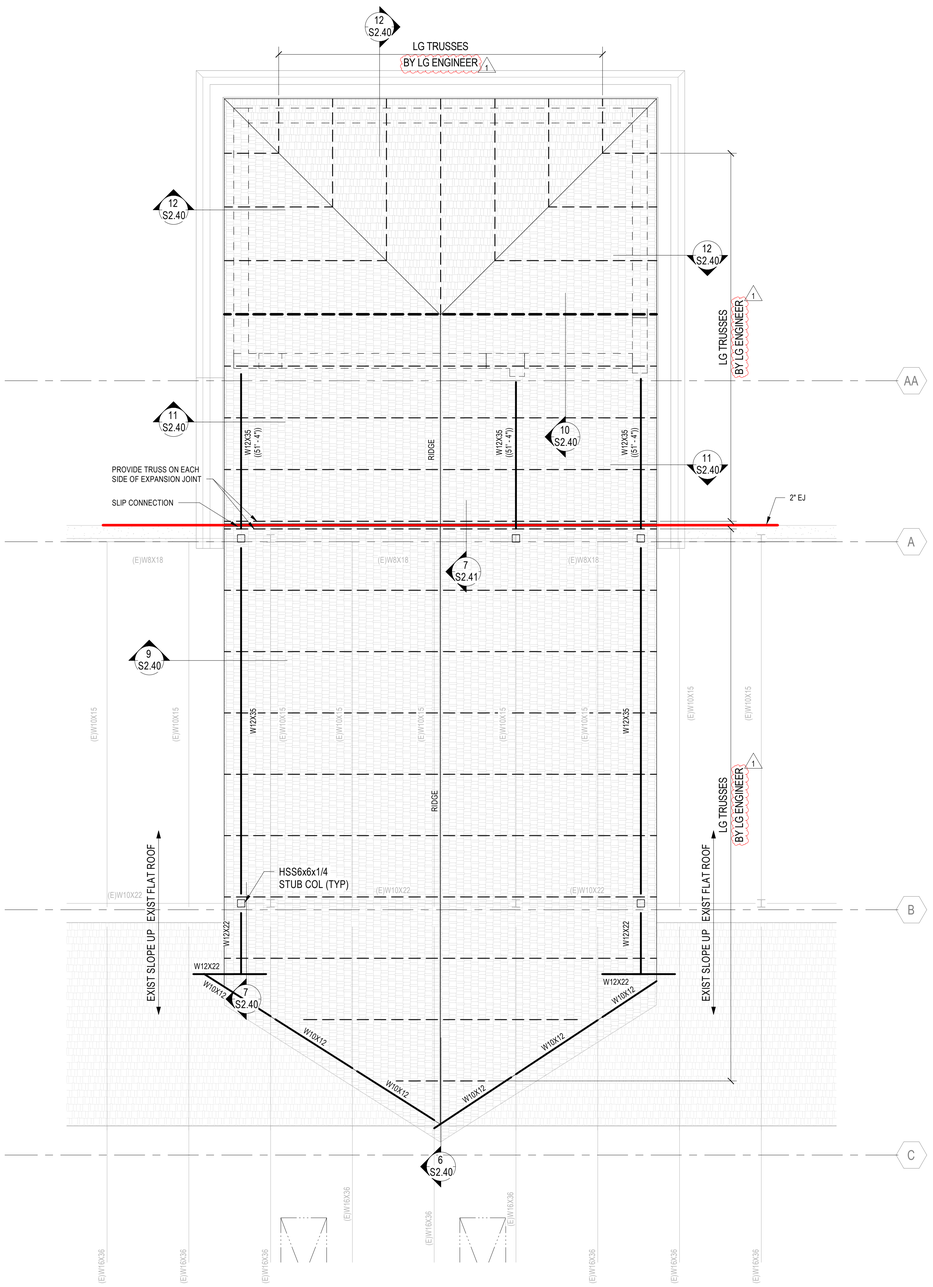

1 ROOF FRAMING PLAN - PART B
1/4" = 1'-0"

COMMUNITY TECTONICS ARCHITECTS
7610 Gleason Road
Knoxville, TN 37919
Ph.: (865) 637-0890
www.communitytectonics.com

Upland Design Group
P.O. Box 11026
Crossville, TN 38557
Ph.: (931) 484-7541
www.uplanddesigngroup.com

W&O Construction
150 Construction Drive
Livingston, TN 38570
Ph.: (931) 403-1000
www.wocc.com

PROJECT
JOHNSON HALL RENOVATION - PKG 3
JOHNSON HALL RENOVATION & FOSTER DEMOLITION
SBC Nº 364/011-04-2022CM

OWNER: TENNESSEE TECH. UNIVERSITY
LOCATION: COOKEVILLE, TN

SEAL
NARASIMHA RAO PINNAMANENI
REGISTERED ENGINEER
No. 105442
STATE OF TENNESSEE
06-24-25
08/28/25

NO.	DESCRIPTION	DATE
1	Addendum #5	6-24-25

JOB NO. 22025
ISSUE DATE 3/28/2025
SHEET TITLE ROOF FRAMING PLAN - PART B
DRAWN JE
REVIEW RP
S1.52

Consulting Engineers
630 Southgate Avenue - Suite C
Nashville, Tennessee 37203
(615) 726-2902 Phone
www.loganpatriengineering.com
LPE Job No.: 23028

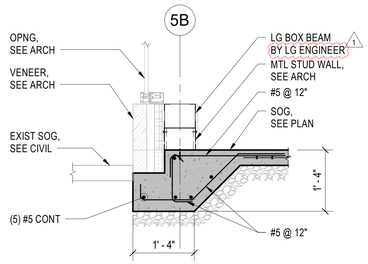

1 FOUNDATION SECTION
3/4" = 1'-0"

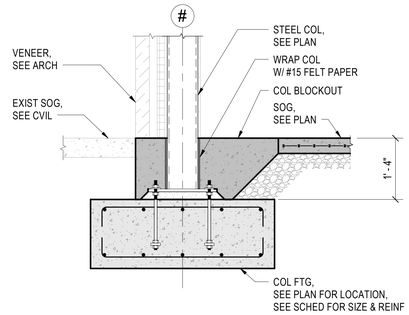

2 FOUNDATION SECTION
3/4" = 1'-0"

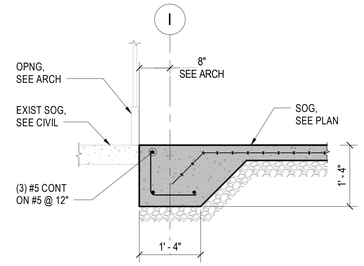

3 FOUNDATION SECTION
3/4" = 1'-0"

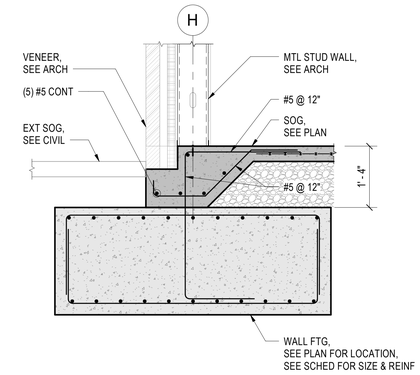

4 FOUNDATION SECTION
3/4" = 1'-0"

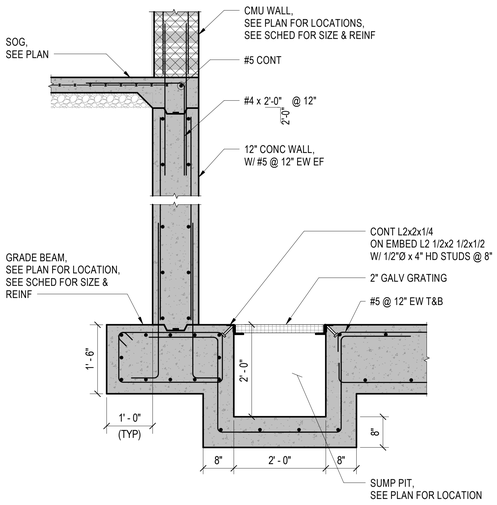

5 FOUNDATION SECTION
3/4" = 1'-0"

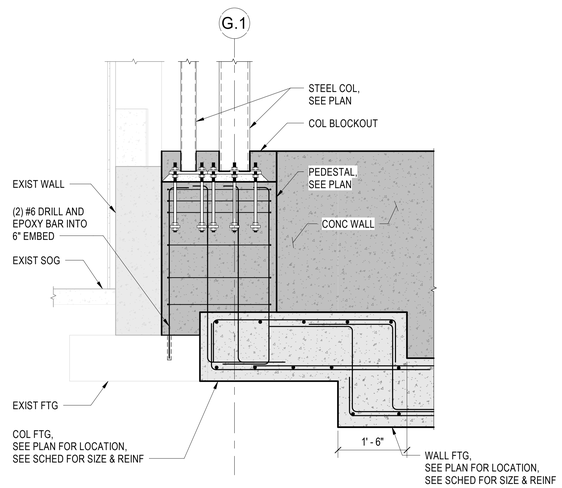

6 FOUNDATION SECTION
3/4" = 1'-0"

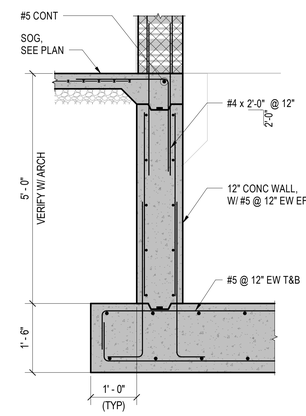

7 FOUNDATION SECTION
3/4" = 1'-0"

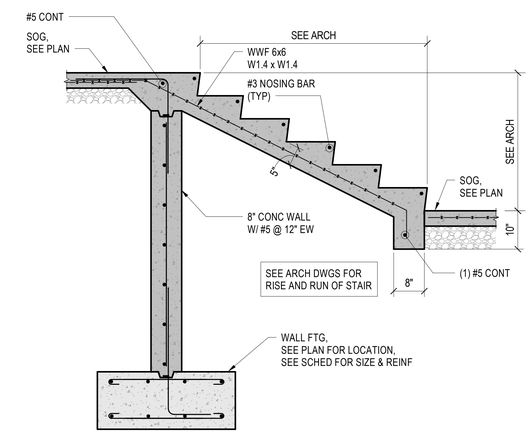

8 FOUNDATION SECTION
3/4" = 1'-0"

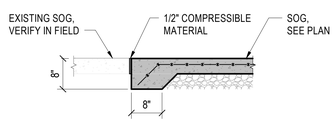

9 FOUNDATION SECTION
3/4" = 1'-0"

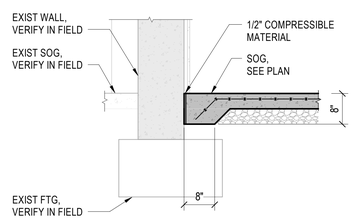

10 FOUNDATION SECTION
3/4" = 1'-0"

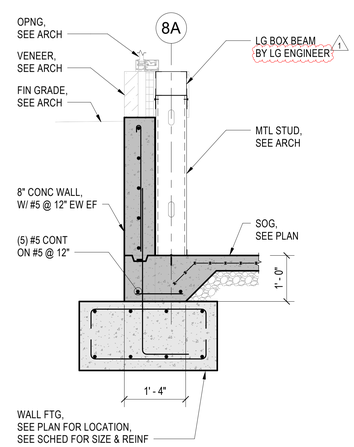

11 FOUNDATION SECTION
3/4" = 1'-0"

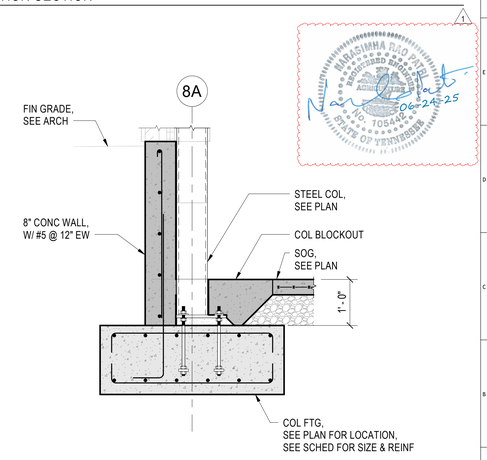

12 FOUNDATION SECTION
3/4" = 1'-0"

COMMUNITY TECTONICS ARCHITECTS
7610 Gleason Road
Knoxville, TN 37919
Ph. (865) 637-0890
www.communitytectonics.com

Upland Design Group
P.O. Box 1026
Crossville, TN 38557
Ph. (931) 484-7541
www.uplanddesigngroup.com

W&O Construction
150 Construction Drive
Livingston, TN 38570
Ph. (931) 403-1000
www.wocc.com

PROJECT
JOHNSON HALL RENOVATION - PKG 3
JOHNSON HALL RENOVATION & FOSTER DEMOLITION
SBC Nº 364/011-04-2022CM

OWNER
TENNESSEE TECH. UNIVERSITY

LOCATION
COOKEVILLE, TN

SEAL
RAMASIMHA RAO PAPINENI
REGISTERED ENGINEER
AGRICULTURE
NO. 105442
STATE OF TENNESSEE
06/28/25

NO.	DESCRIPTION	DATE
1	Addendum #5	6-24-25

JOB NO.
22025

ISSUE DATE
3/28/2025

SHEET TITLE
FOUNDATION & FIRST FLOOR SECTIONS

DRAWN
JE

REVIEW
RP

S2.10

Consulting Engineers
630 Southgate Avenue - Suite C
Nashville, Tennessee 37203
(615) 726-2902 Phone
www.loganpatriengineering.com
LPE Job No.: 23028

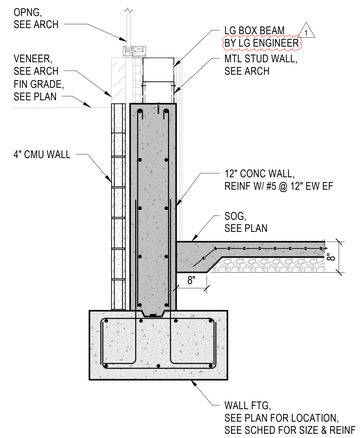

1 FOUNDATION SECTION
3/4" = 1'-0"

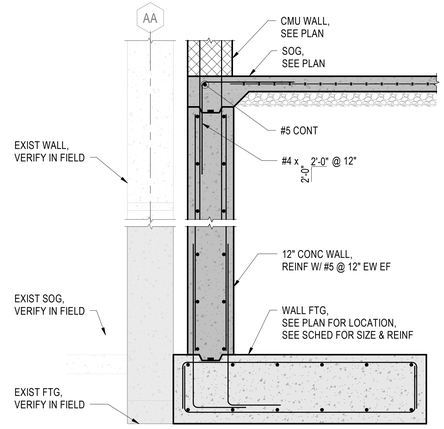

2 FOUNDATION SECTION
3/4" = 1'-0"

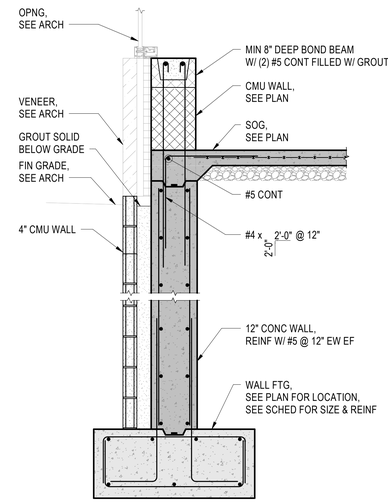

3 FOUNDATION SECTION
3/4" = 1'-0"

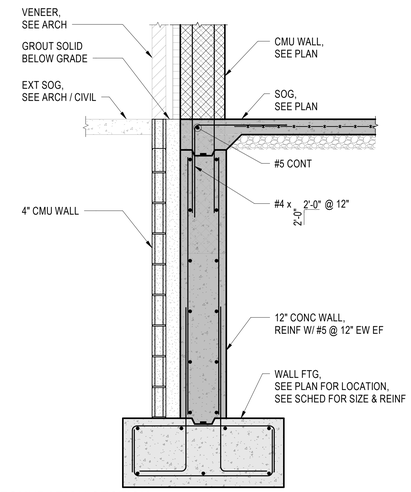

4 FOUNDATION SECTION
3/4" = 1'-0"

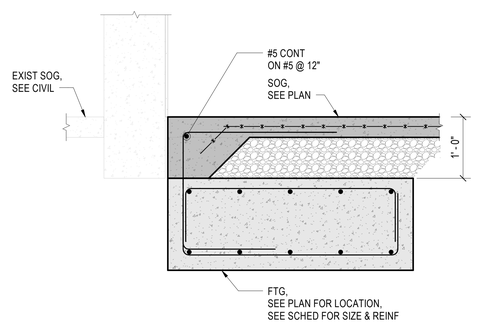

5 FOUNDATION SECTION
1" = 1'-0"

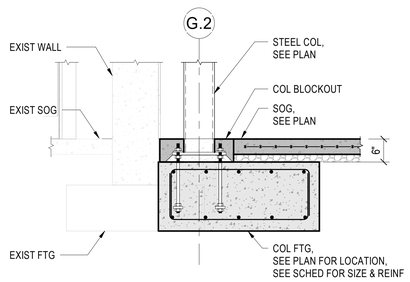

6 FOUNDATION SECTION
3/4" = 1'-0"

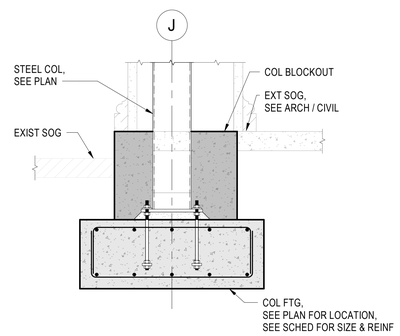

7 FOUNDATION SECTION
3/4" = 1'-0"

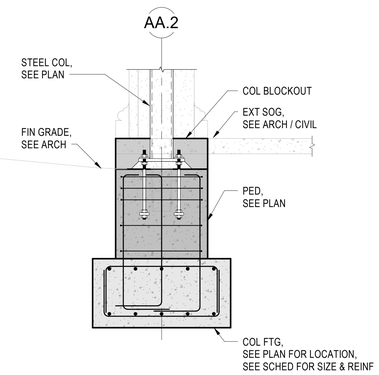

8 FOUNDATION SECTION
3/4" = 1'-0"

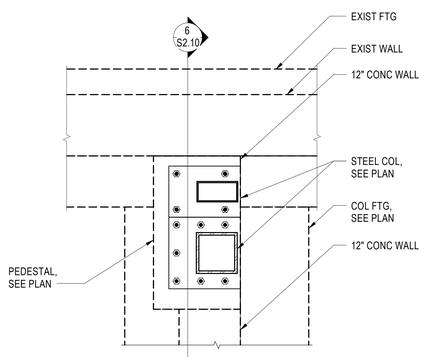

9 ENLARGED PLAN DETAIL
1" = 1'-0"

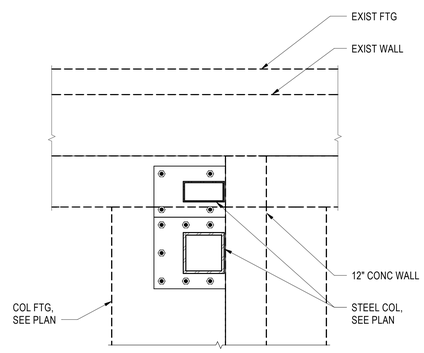

10 ENLARGED PLAN DETAIL
1" = 1'-0"

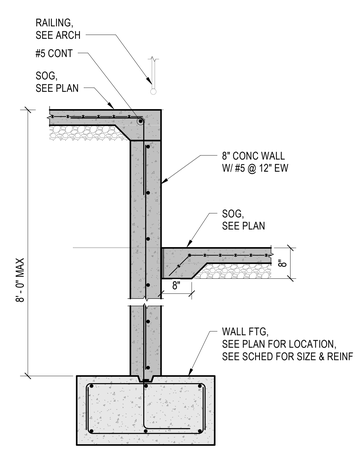

11 FOUNDATION SECTION
3/4" = 1'-0"

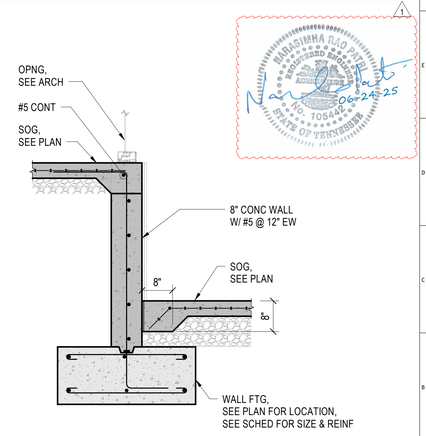

12 FOUNDATION SECTION
3/4" = 1'-0"

COMMUNITY TECTONICS ARCHITECTS
7610 Gleason Road
Knoxville, TN 37919
Ph. (865) 637-0890
www.communitytectonics.com

Upland Design Group
P.O. Box 11026
Cookeville, TN 38557
Ph. (931) 484-7541
www.uplanddesigngroup.com

W&O Construction
150 Construction Drive
Livingston, TN 38570
Ph. (931) 403-1000
www.wocc.com

PROJECT
JOHNSON HALL RENOVATION - PKG 3
JOHNSON HALL RENOVATION & FOSTER DEMOLITION
SBC Nº 364/011-04-2022CM

OWNER
TENNESSEE TECH. UNIVERSITY

LOCATION
COOKEVILLE, TN

SEAL
RAMASIMHA RAO PAPINENI
REGISTERED ENGINEER
AGRICULTURE
NO. 105442
STATE OF TENNESSEE
06/28/25

NO.	DESCRIPTION	DATE
1	Addendum #5	6-24-25

RAMASIMHA RAO PAPINENI
REGISTERED ENGINEER
AGRICULTURE
NO. 105442
STATE OF TENNESSEE
06-24-25

JOB NO.
22025

ISSUE DATE
3/28/2025

SHEET TITLE
FOUNDATION & FIRST FLOOR SECTIONS

DRAWN
JE

REVIEW
RP

S2.11

Consulting Engineers
630 Southgate Avenue - Suite C
Nashville, Tennessee 37203
(615) 726-2902 Phone
www.loganpatriengineering.com
LPE Job No.: 23028

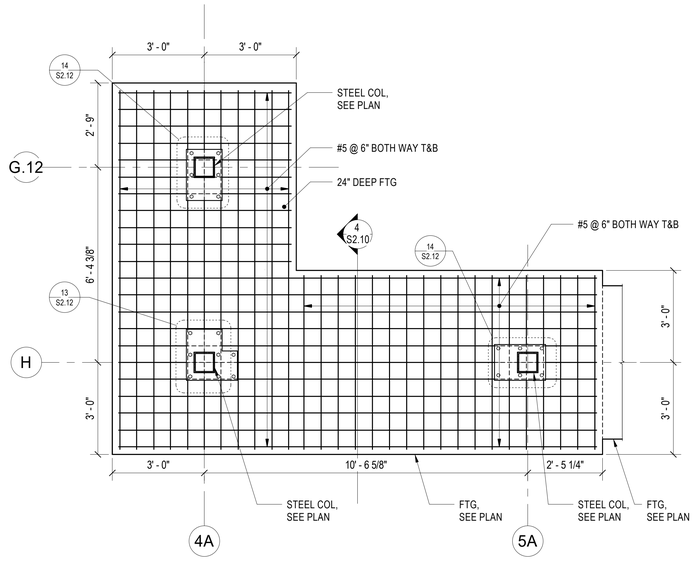

5 ENLARGED FOOTING REINF DETAIL
1/2" = 1'-0"

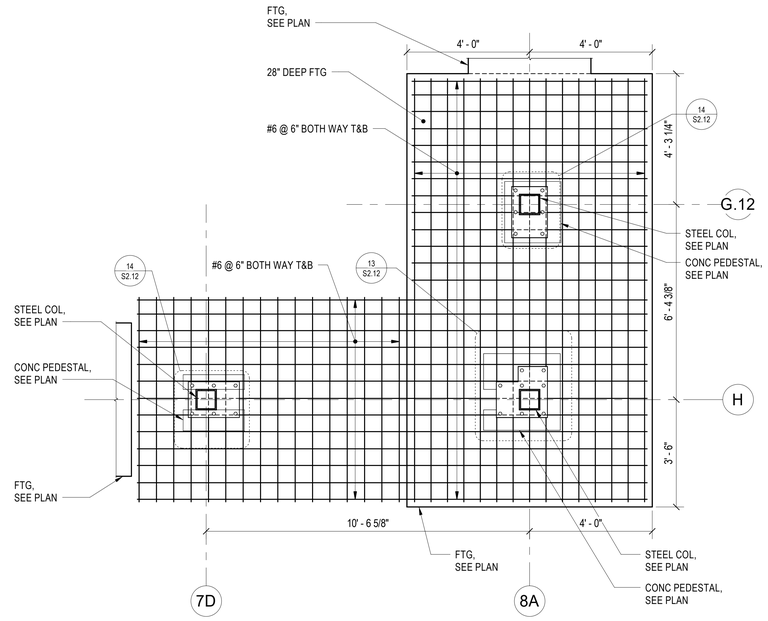

7 ENLARGED FOOTING REINF DETAIL
1/2" = 1'-0"

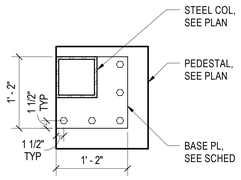

9 BASE PLATE DETAIL - SC3B
1" = 1'-0"

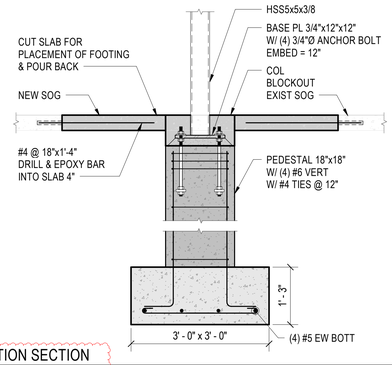

11 FOUNDATION SECTION
3/4" = 1'-0"

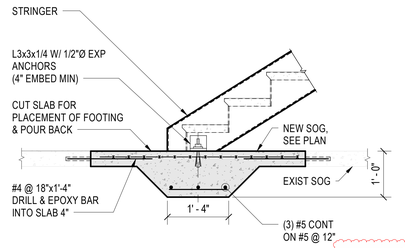

12 FOUNDATION SECTION
3/4" = 1'-0"

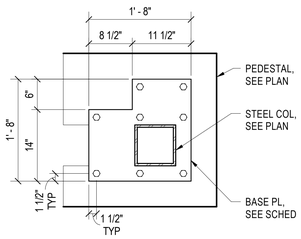

13 BASE PLATE DETAIL - SC5
1" = 1'-0"

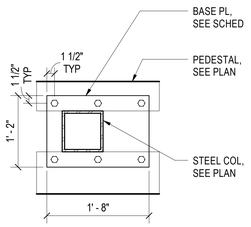

14 BASE PLATE DETAIL - SC6
1" = 1'-0"

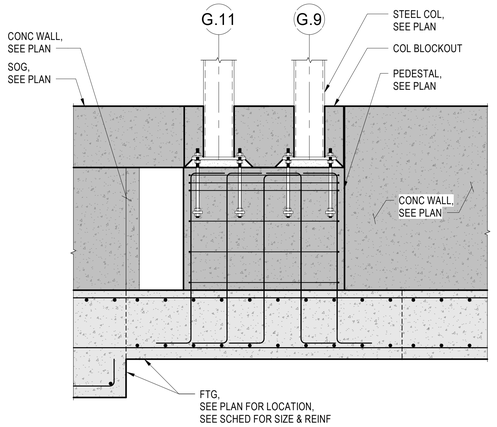

15 FOUNDATION SECTION
3/4" = 1'-0"

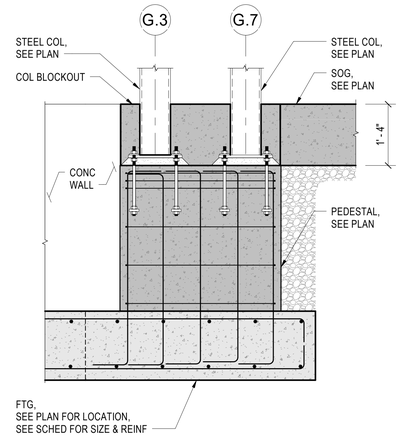

16 FOUNDATION SECTION
3/4" = 1'-0"

COMMUNITY TECTONICS ARCHITECTS
7610 Gleason Road
Knoxville, TN 37919
Ph. (865) 637-0890
www.communitytectonics.com

Upland Design Group
P.O. Box 1026
Crossville, TN 38557
Ph. (931) 484-7541
www.uplanddesigngroup.com

W&Q Construction
156 Construction Drive
Livingston, TN 38570
Ph. (931) 403-1000
www.wqcc.com

PROJECT
JOHNSON HALL RENOVATION - PKG 3
JOHNSON HALL RENOVATION & FOSTER DEMOLITION
SBC Nº 364/011-04-2022CM

OWNER
TENNESSEE TECH. UNIVERSITY

LOCATION
COOKEVILLE, TN

SEAL
NARASIMHA RAO PARUCHURI
REGISTERED ENGINEER
No. 105440
STATE OF TENNESSEE
06/24/25

NO.	DESCRIPTION	DATE
1	Addendum #5	6-24-25

JOB NO.
22025

ISSUE DATE
3/28/2025

SHEET TITLE
FOUNDATION & FIRST FLOOR SECTIONS

DRAWN
JE

REVIEW
RP

S2.12

Consulting Engineers
630 Southgate Avenue - Suite C
Nashville, Tennessee 37203
(615) 726-2902 Phone
www.loganpatriengineering.com
LPE Job No.: 23028

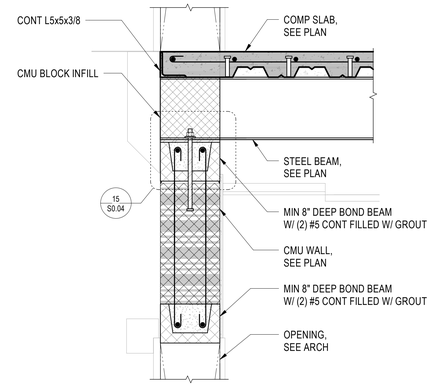

3 FLOOR FRAMING SECTION
1" = 1'-0"

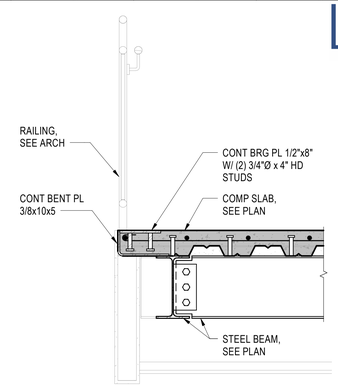

4 FLOOR FRAMING SECTION
1" = 1'-0"

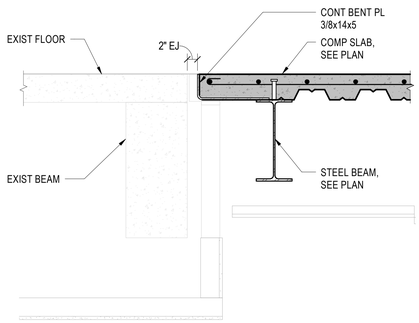

5 FLOOR FRAMING SECTION
1" = 1'-0"

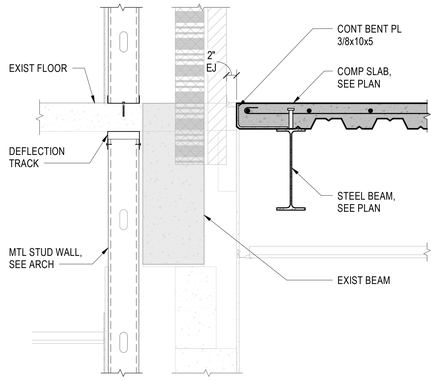

6 FLOOR FRAMING SECTION
1" = 1'-0"

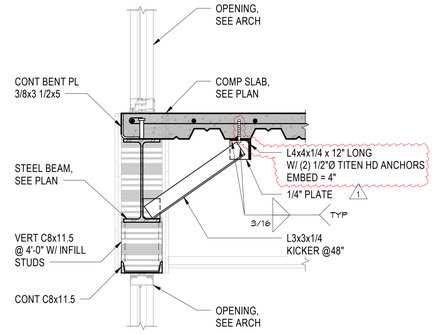

7 FLOOR FRAMING SECTION
1" = 1'-0"

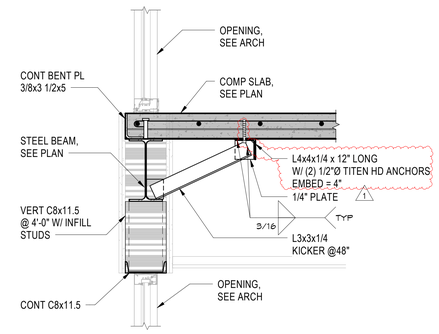

8 FLOOR FRAMING SECTION
1" = 1'-0"

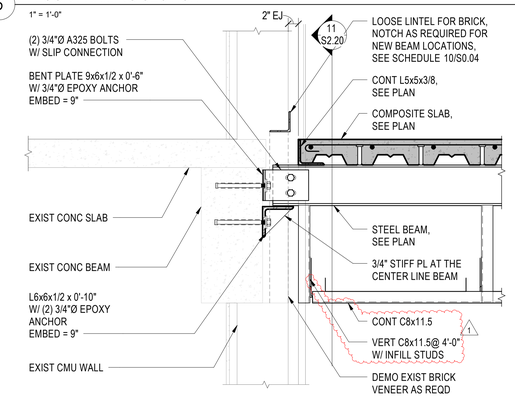

9 FLOOR FRAMING SECTION
1" = 1'-0"

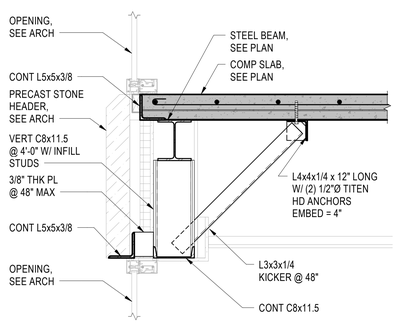

10 FLOOR FRAMING SECTION
1" = 1'-0"

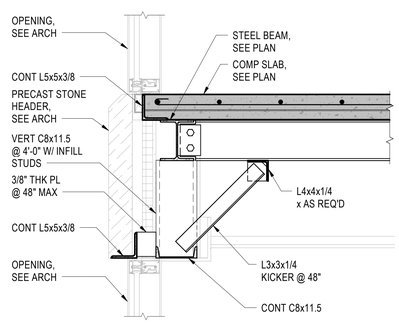

11 FLOOR FRAMING SECTION
1" = 1'-0"

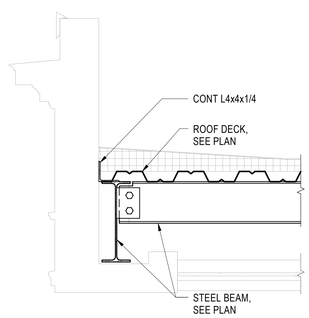

14 FLOOR FRAMING SECTION
1" = 1'-0"

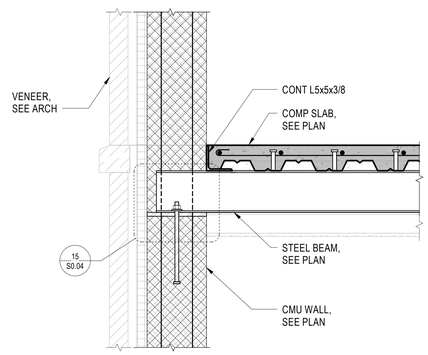

15 FLOOR FRAMING SECTION
1" = 1'-0"

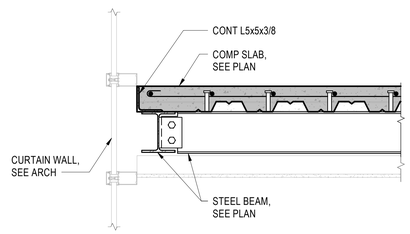

16 FLOOR FRAMING SECTION
1" = 1'-0"

COMMUNITY TECTONICS ARCHITECTS
Knoxville, TN 37919
7610 Gleason Road
Ph. (865) 637-0890
www.communitytectonics.com

Upland Design Group
Crossville, TN 38557
P.O. Box 1026
Ph. (931) 484-7541
www.uplanddesigngroup.com

W&O Construction
Livingston, TN 38570
150 Construction Drive
Ph. (931) 403-1000
www.wocc.com

PROJECT
JOHNSON HALL RENOVATION - PKG 3
JOHNSON HALL RENOVATION & FOSTER DEMOLITION
SBC Nº 364/011-04-2022CM

OWNER
TENNESSEE TECH. UNIVERSITY

LOCATION
COOKEVILLE, TN

SEAL
NARASIMHA RAO PINNINTI
REGISTERED ENGINEER
LIC. NO. 105440
STATE OF TENNESSEE
06-24-25
03/28/25

NO.	DESCRIPTION	DATE
1	Addendum #5	6-24-25

JOB NO. 22025

ISSUE DATE 3/28/2025

SHEET TITLE
FLOOR FRAMING SECTIONS

DRAWN JE

REVIEW RP

S2.20

Consulting Engineers
630 Southgate Avenue - Suite C
Nashville, Tennessee 37203
(615) 726-2902 Phone
www.loganpatriengineering.com
LPE Job No.: 23028

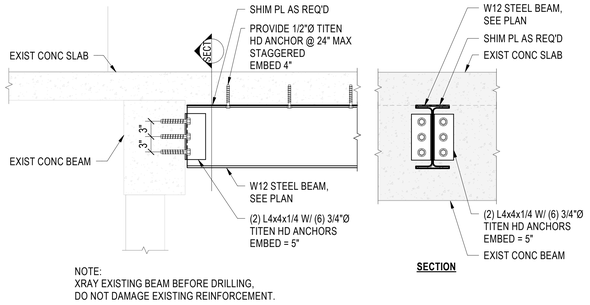

NOTE:
XRAY EXISTING BEAM BEFORE DRILLING,
DO NOT DAMAGE EXISTING REINFORCEMENT.

1 FLOOR FRAMING SECTION
1" = 1'-0"

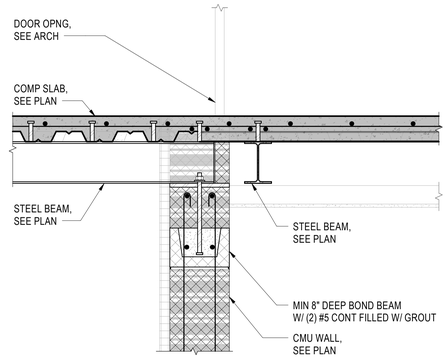

2 FLOOR FRAMING SECTION
1" = 1'-0"

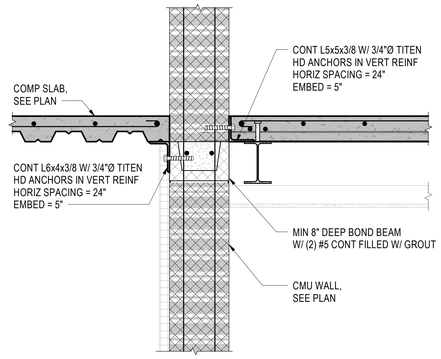

3 FLOOR FRAMING SECTION
1" = 1'-0"

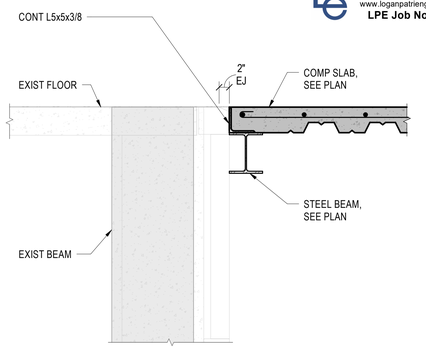

4 FLOOR FRAMING SECTION
1" = 1'-0"

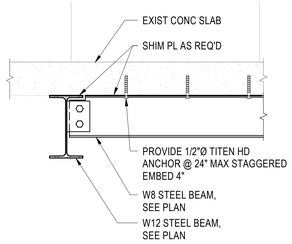

NOTE:
XRAY EXISTING BEAM BEFORE DRILLING,
DO NOT DAMAGE EXISTING REINFORCEMENT.

5 FLOOR FRAMING SECTION
1" = 1'-0"

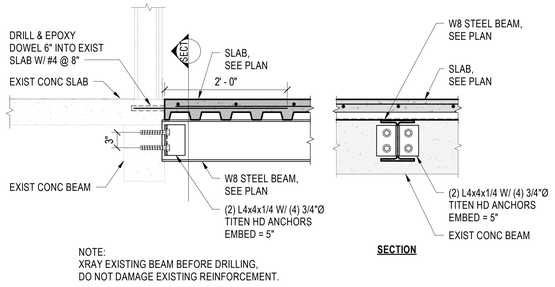

NOTE:
XRAY EXISTING BEAM BEFORE DRILLING,
DO NOT DAMAGE EXISTING REINFORCEMENT.

6 FLOOR FRAMING SECTION
1" = 1'-0"

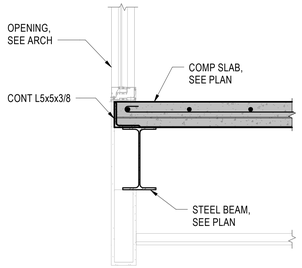

7 FLOOR FRAMING SECTION
1" = 1'-0"

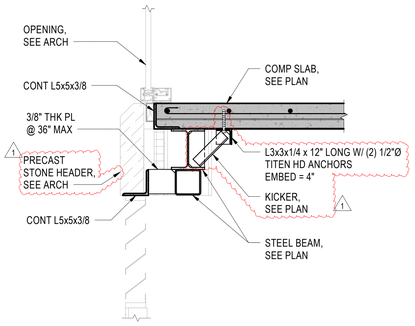

8 FLOOR FRAMING SECTION
1" = 1'-0"

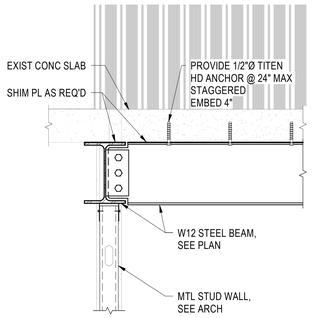

NOTE:
XRAY EXISTING BEAM BEFORE DRILLING,
DO NOT DAMAGE EXISTING REINFORCEMENT.

9 FLOOR FRAMING SECTION
1" = 1'-0"

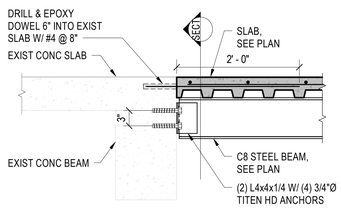

NOTE:
XRAY EXISTING BEAM BEFORE DRILLING,
DO NOT DAMAGE EXISTING REINFORCEMENT.

10 FLOOR FRAMING SECTION
1" = 1'-0"

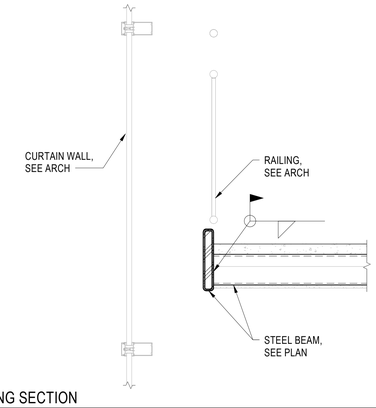

11 FLOOR FRAMING SECTION
1" = 1'-0"

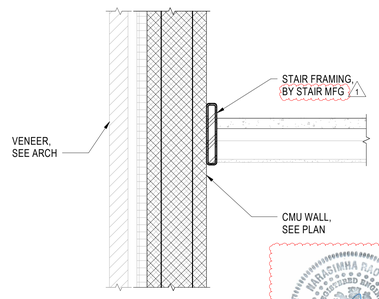

12 FLOOR FRAMING SECTION
1" = 1'-0"

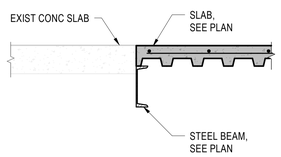

13 FLOOR FRAMING SECTION
1" = 1'-0"

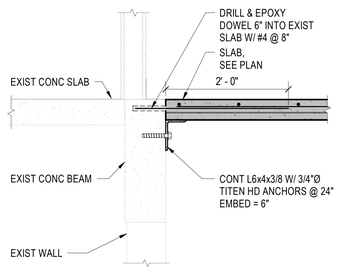

NOTE:
XRAY EXISTING BEAM BEFORE DRILLING,
DO NOT DAMAGE EXISTING REINFORCEMENT.

14 FLOOR FRAMING SECTION
1" = 1'-0"

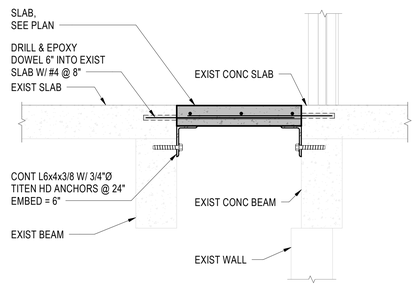

NOTE:
XRAY EXISTING BEAM BEFORE DRILLING,
DO NOT DAMAGE EXISTING REINFORCEMENT.

15 FLOOR FRAMING SECTION
1" = 1'-0"

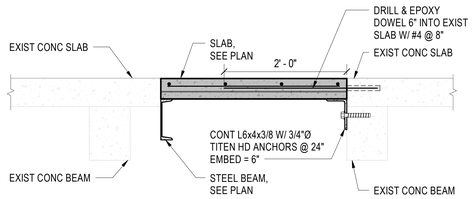

NOTE:
XRAY EXISTING BEAM BEFORE DRILLING,
DO NOT DAMAGE EXISTING REINFORCEMENT.

16 FLOOR FRAMING SECTION
1" = 1'-0"

COMMUNITY TECTONICS ARCHITECTS
Knoxville, TN 37919
7610 Gleason Road
Ph. (865) 637-0890
www.communitytectonics.com

Upland Design Group
Crossville, TN 38557
P.O. Box 1026
Ph. (931) 484-7541
www.uplanddesigngroup.com

W&O Construction
Livingston, TN 38570
150 Construction Drive
Ph. (931) 403-1000
www.wocc.com

PROJECT
JOHNSON HALL RENOVATION - PKG 3
JOHNSON HALL RENOVATION & FOSTER DEMOLITION
SBC Nº 364/011-04-2022CM

LOCATION
COOKEVILLE, TN

OWNER
TENNESSEE TECH. UNIVERSITY

SEAL
NARASIMHA RAO PAPINENI
REGISTERED ENGINEER
AGRICULTURE
NO. 105448
STATE OF TENNESSEE
06/28/25

NO.	DESCRIPTION	DATE
1	Addendum #5	6-24-25

JOB NO. 22025

ISSUE DATE 3/28/2025

SHEET TITLE
FLOOR FRAMING SECTIONS

DRAWN JE

REVIEW RP

S2.22

Consulting Engineers
630 Southgate Avenue - Suite C
Nashville, Tennessee 37203
(615) 726-2902 Phone
www.loganpatriengineering.com
LPE Job No.: 23028

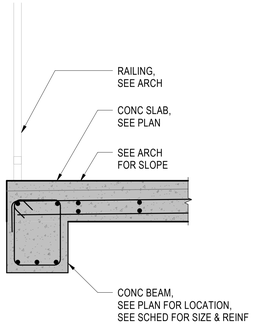

1 FLOOR FRAMING SECTION
1" = 1'-0"

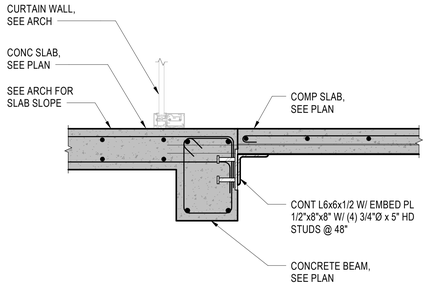

2 FLOOR FRAMING SECTION
1" = 1'-0"

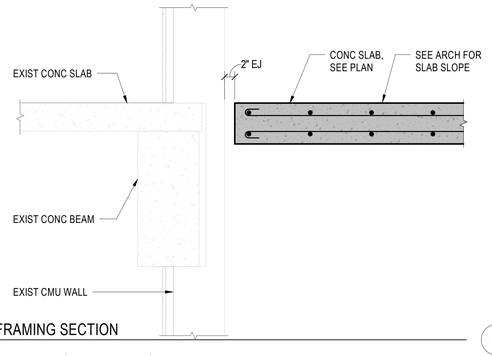

3 FLOOR FRAMING SECTION
1" = 1'-0"

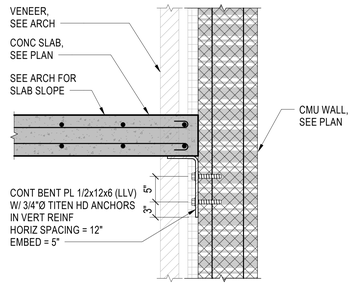

4 FLOOR FRAMING SECTION
1" = 1'-0"

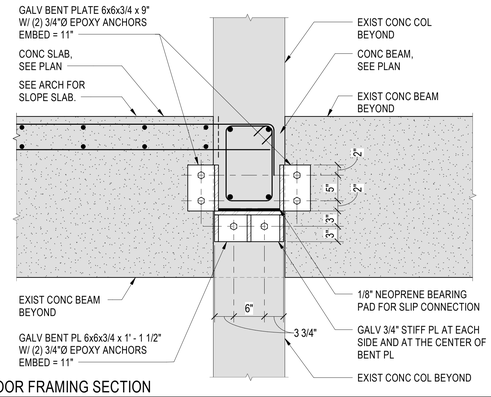

6 FLOOR FRAMING SECTION
1" = 1'-0"

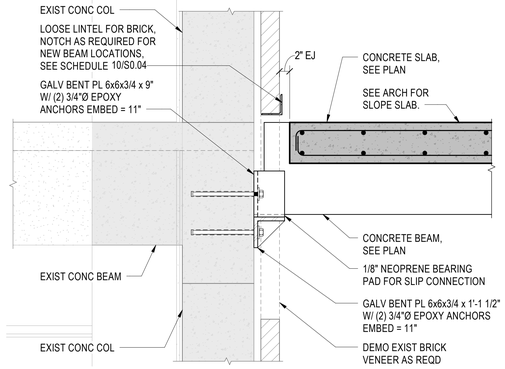

7 FLOOR FRAMING SECTION
1" = 1'-0"

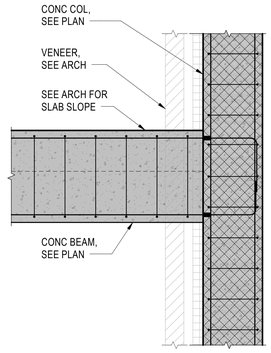

8 FLOOR FRAMING SECTION
1" = 1'-0"

COMMUNITY TECTONICS ARCHITECTS
Knoxville, TN 37919
7610 Gleason Road
Ph. (865) 637-0890
www.communitytectonics.com

Upland Design Group
Crossville, TN 38557
P.O. Box 1026
Ph. (931) 484-7541
www.uplanddesigngroup.com

W&O Construction
Livingston, TN 38570
150 Construction Drive
Ph. (931) 403-1000
www.wocc.com

PROJECT
JOHNSON HALL RENOVATION - PKG 3
JOHNSON HALL RENOVATION & FOSTER DEMOLITION
SBC Nº 364/011-04-2022CM

OWNER
TENNESSEE TECH. UNIVERSITY

LOCATION
COOKEVILLE, TN

SEAL
RAGHUNATHA RAO TOSANAM
REGISTERED ARCHITECT
No. 102000
STATE OF TENNESSEE
06/24/25

NO.	DESCRIPTION	DATE
1	Addendum #5	6-24-25

JOB NO.
22025

ISSUE DATE
3/28/2025

SHEET TITLE
FLOOR FRAMING SECTIONS - ALTERNATES

DRAWN
JE

REVIEW
RP

S2.23
1

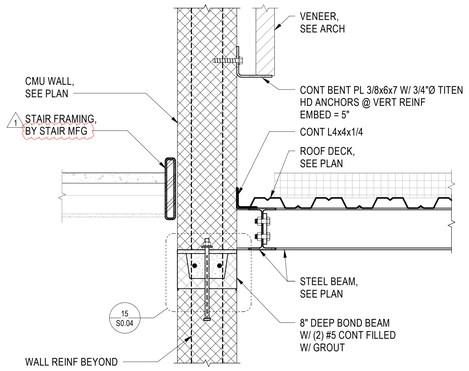

1 LOW ROOF FRAMING SECTION
1" = 1'-0"

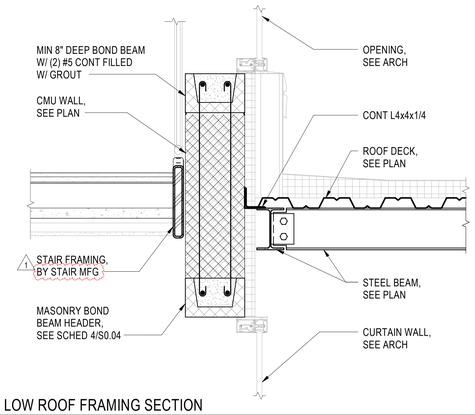

2 LOW ROOF FRAMING SECTION
1" = 1'-0"

Consulting Engineers
630 Southgate Avenue - Suite C
Nashville, Tennessee 37203
(615) 726-2902 Phone
www.loganpatriengineering.com
LPE Job No.: 23028

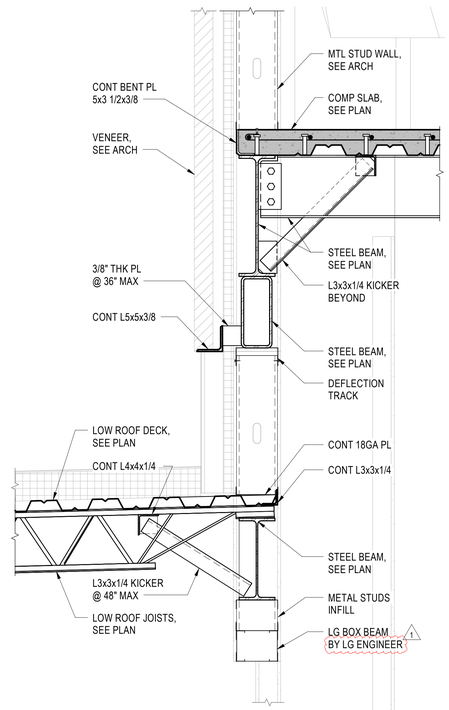

7 LOW ROOF FRAMING SECTION
1" = 1'-0"

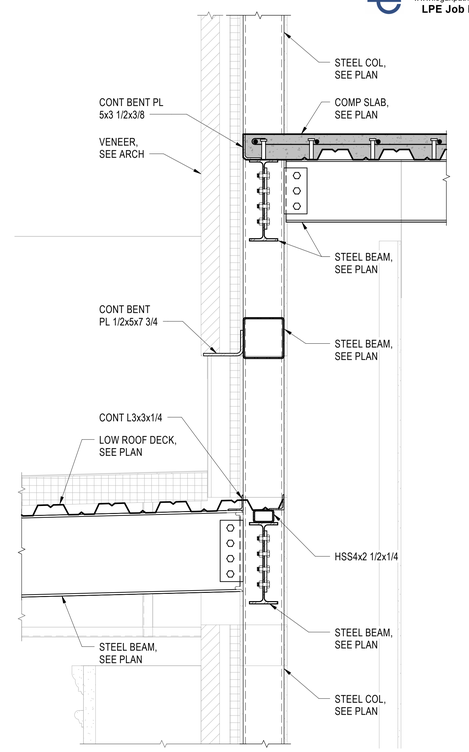

8 LOW ROOF FRAMING SECTION
1" = 1'-0"

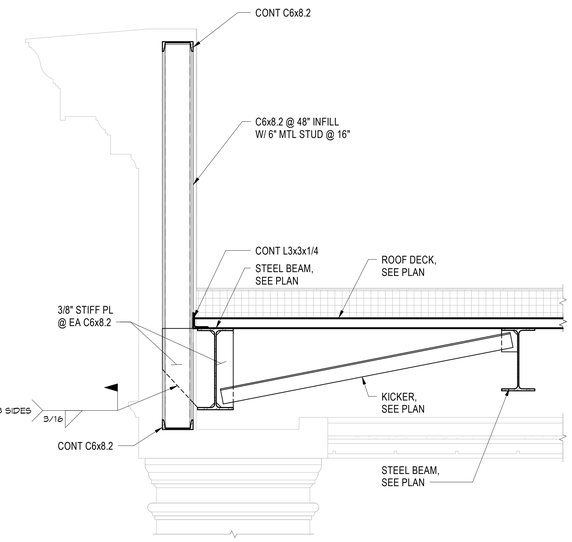

13 LOW ROOF FRAMING SECTION
1" = 1'-0"

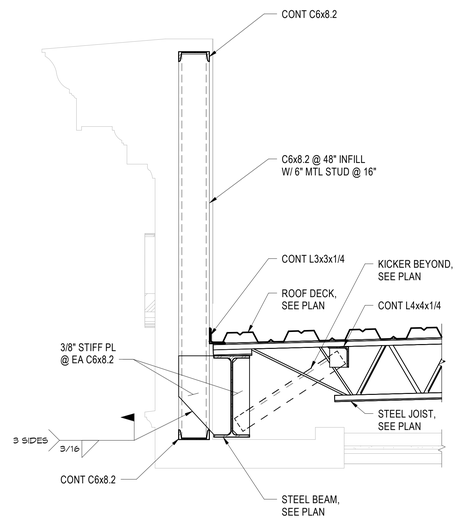

14 LOW ROOF FRAMING SECTION
1" = 1'-0"

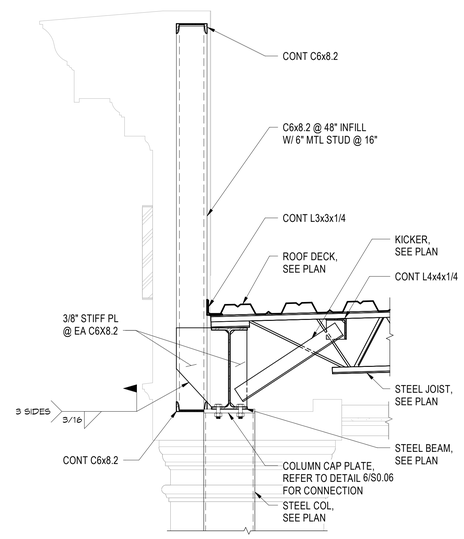

15 LOW ROOF FRAMING SECTION
1" = 1'-0"

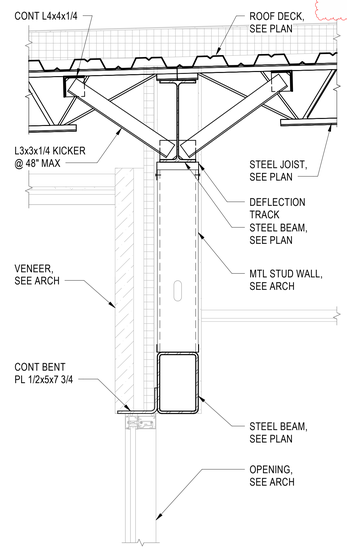

16 LOW ROOF FRAMING SECTION
1" = 1'-0"

COMMUNITY TECTONICS ARCHITECTS
Knoxville, TN 37919 — 7610 Gleason Road — Ph. (865) 637-0890 — www.communitytectonics.com

Upland Design Group
Crossville, TN 38557 — P.O. Box 1026 — Ph. (931) 484-7541 — www.uplanddesigngroup.com

W&O Construction
Livingston, TN 38570 — 150 Construction Drive — Ph. (931) 403-1000 — www.wocc.com

PROJECT
JOHNSON HALL RENOVATION - PKG 3
JOHNSON HALL RENOVATION & FOSTER DEMOLITION
SBC Nº 364/011-04-2022CM

OWNER
TENNESSEE TECH. UNIVERSITY

LOCATION
COOKEVILLE, TN

SEAL
RAMASIMHA RAO PATIBANDLA — REGISTERED ARCHITECT — No. 705448 — STATE OF TENNESSEE
06-24-25
03/28/25

NO.	DESCRIPTION	DATE
1	Addendum #5	6-24-25

JOB NO. 22025
ISSUE DATE 3/28/2025
SHEET TITLE LOW ROOF FRAMING SECTIONS
DRAWN JE
REVIEW RP
S2.30

Consulting Engineers
630 Southgate Avenue - Suite C
Nashville, Tennessee 37203
(615) 726-2902 Phone
www.loganpatriengineering.com
LPE Job No.: 23028

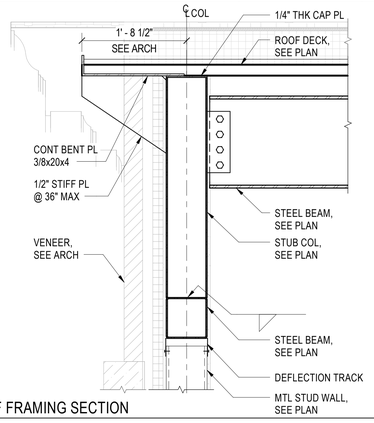

1 HIGH ROOF FRAMING SECTION
1" = 1'-0"

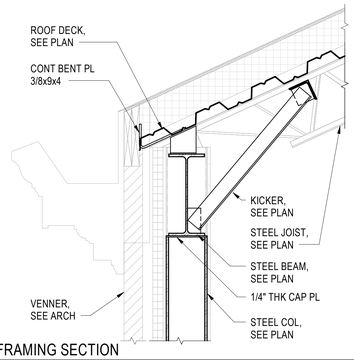

2 HIGH ROOF FRAMING SECTION
1" = 1'-0"

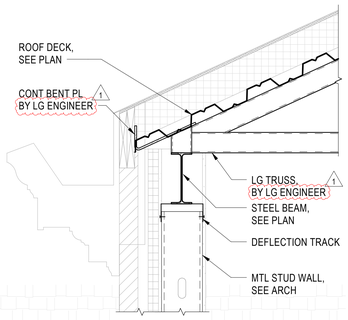

3 HIGH ROOF FRAMING SECTION
1" = 1'-0"

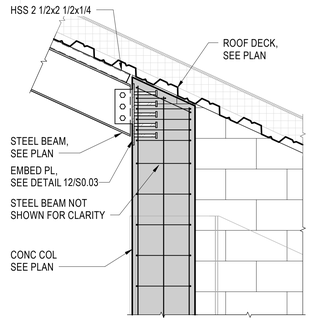

4 HIGH ROOF FRAMING SECTION
3/4" = 1'-0"

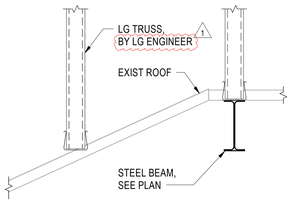

5 HIGH ROOF FRAMING SECTION
1" = 1'-0"

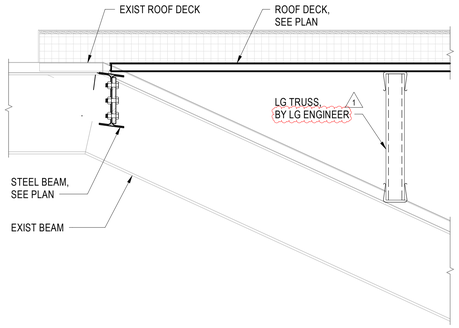

6 HIGH ROOF FRAMING SECTION
1" = 1'-0"

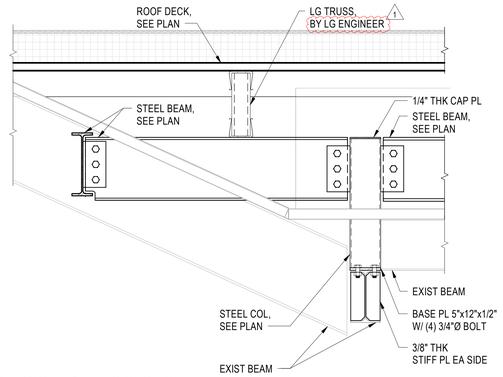

7 HIGH ROOF FRAMING SECTION
1" = 1'-0"

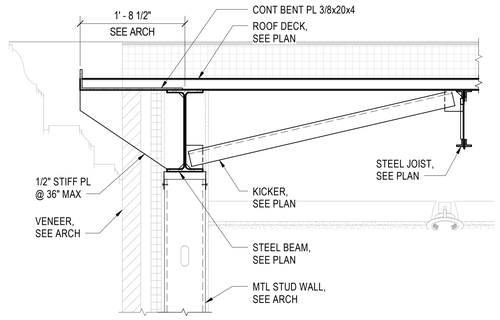

8 HIGH ROOF FRAMING SECTION
1" = 1'-0"

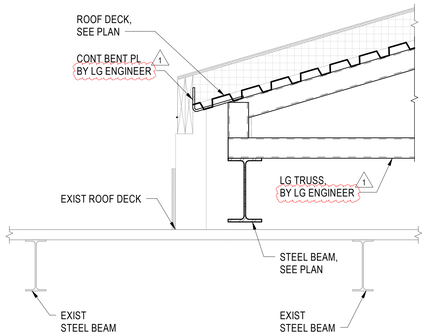

9 HIGH ROOF FRAMING SECTION
1" = 1'-0"

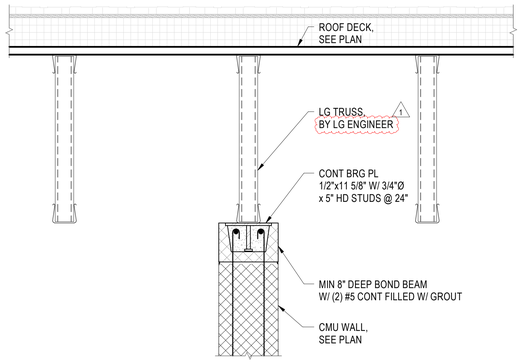

10 HIGH ROOF FRAMING SECTION
1" = 1'-0"

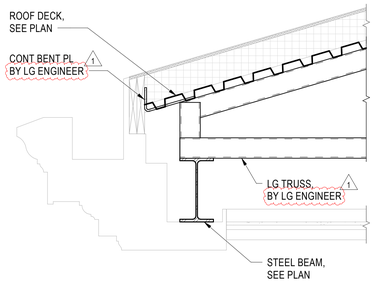

11 HIGH ROOF FRAMING SECTION
1" = 1'-0"

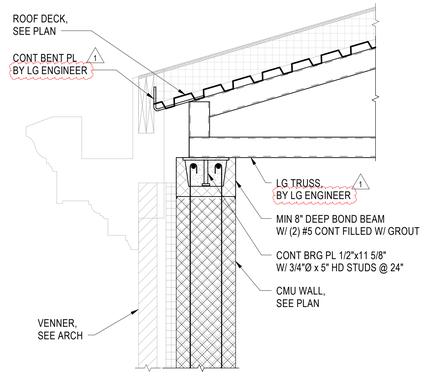

12 HIGH ROOF FRAMING SECTION
1" = 1'-0"

1

COMMUNITY TECTONICS ARCHITECTS
7610 Gleason Road
Knoxville, TN 37919
Ph. (865) 637-0890
www.communitytectonics.com

Upland Design Group
P.O. Box 11026
Cookeville, TN 38557
Ph. (931) 484-7541
www.uplanddesigngroup.com

W&O Construction
150 Construction Drive
Livingston, TN 38570
Ph. (931) 403-1000
www.wocc.com

PROJECT
JOHNSON HALL RENOVATION - PKG 3
JOHNSON HALL RENOVATION & FOSTER DEMOLITION
SBC Nº 364/011-04-2022CM

OWNER: TENNESSEE TECH. UNIVERSITY
LOCATION: COOKEVILLE, TN

SEAL

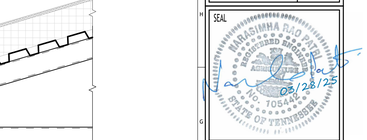

NO.	DESCRIPTION	DATE
1	Addendum #5	6-24-25

JOB NO. 22025

ISSUE DATE 3/28/2025

SHEET TITLE ROOF FRAMING SECTIONS

DRAWN JE

REVIEW RP

S2.40

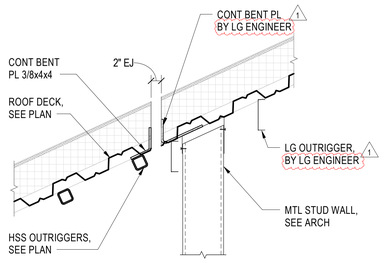

1 HIGH ROOF FRAMING SECTION
1" = 1'-0"

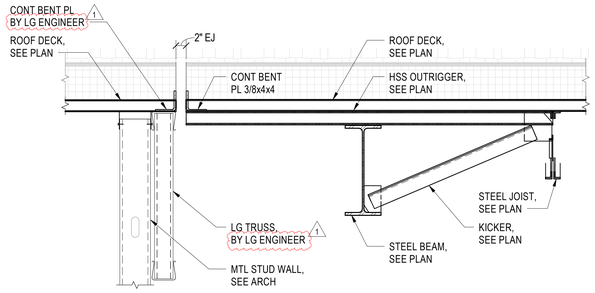

2 HIGH ROOF FRAMING SECTION
1" = 1'-0"

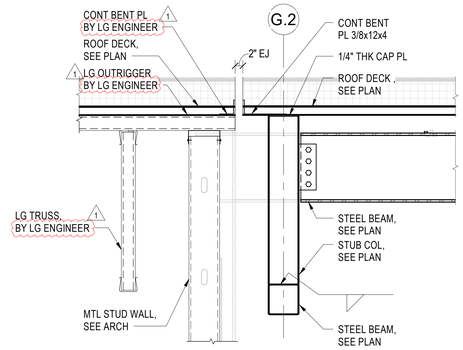

3 ROOF FRAMING SECTION
3/4" = 1'-0"

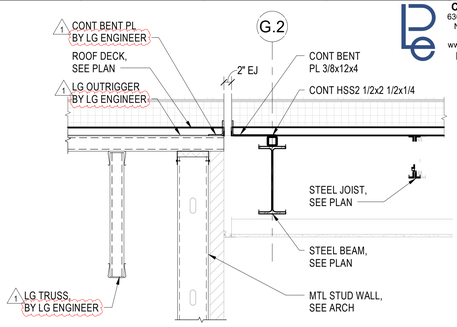

4 ROOF FRAMING SECTION
3/4" = 1'-0"

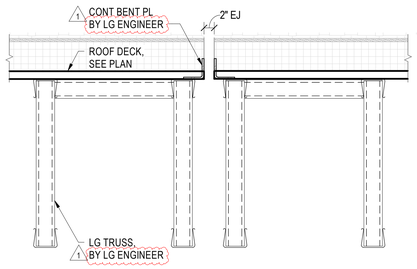

7 HIGH ROOF FRAMING SECTION
1" = 1'-0"

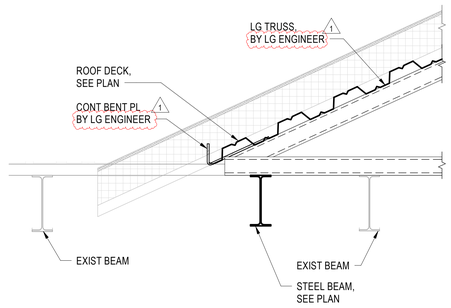

8 HIGH ROOF FRAMING SECTION
1" = 1'-0"

Consulting Engineers
630 Southgate Avenue - Suite C
Nashville, Tennessee 37203
(615) 726-2902 Phone
www.loganpatriengineering.com
LPE Job No.: 23028

COMMUNITY TECTONICS ARCHITECTS
7610 Gleason Road
Knoxville, TN 37919
Ph. (865) 637-0890
www.communitytectonics.com

Upland Design Group
P.O. Box 1026
Crossville, TN 38557
Ph. (931) 484-7541
www.uplanddesigngroup.com

W&O Construction
150 Construction Drive
Livingston, TN 38570
Ph. (931) 403-1000
www.wocc.com

PROJECT
JOHNSON HALL RENOVATION - PKG 3
JOHNSON HALL RENOVATION & FOSTER DEMOLITION
SBC Nº 364/011-04-2022CM

OWNER
TENNESSEE TECH. UNIVERSITY

LOCATION
COOKEVILLE, TN

SEAL

NO.	DESCRIPTION	DATE
1	Addendum #5	6-24-25

JOB NO.
22025

ISSUE DATE
3/28/2025

SHEET TITLE
ROOF FRAMING SECTIONS

DRAWN
JE

REVIEW
RP

S2.41

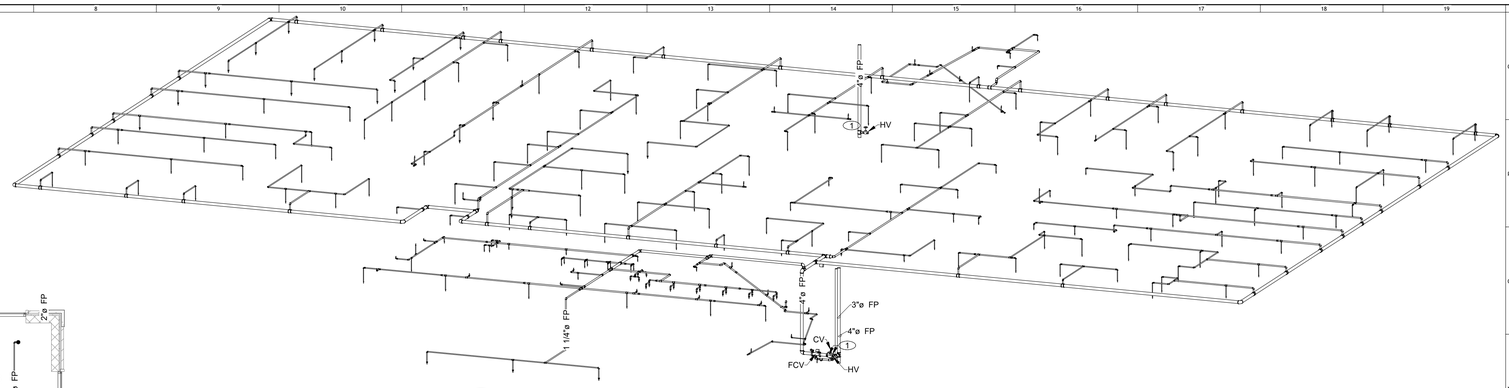

2 FP1.3 THIRD FLOOR FIRE PROTECTION ISOMETRIC

NOT TO SCALE

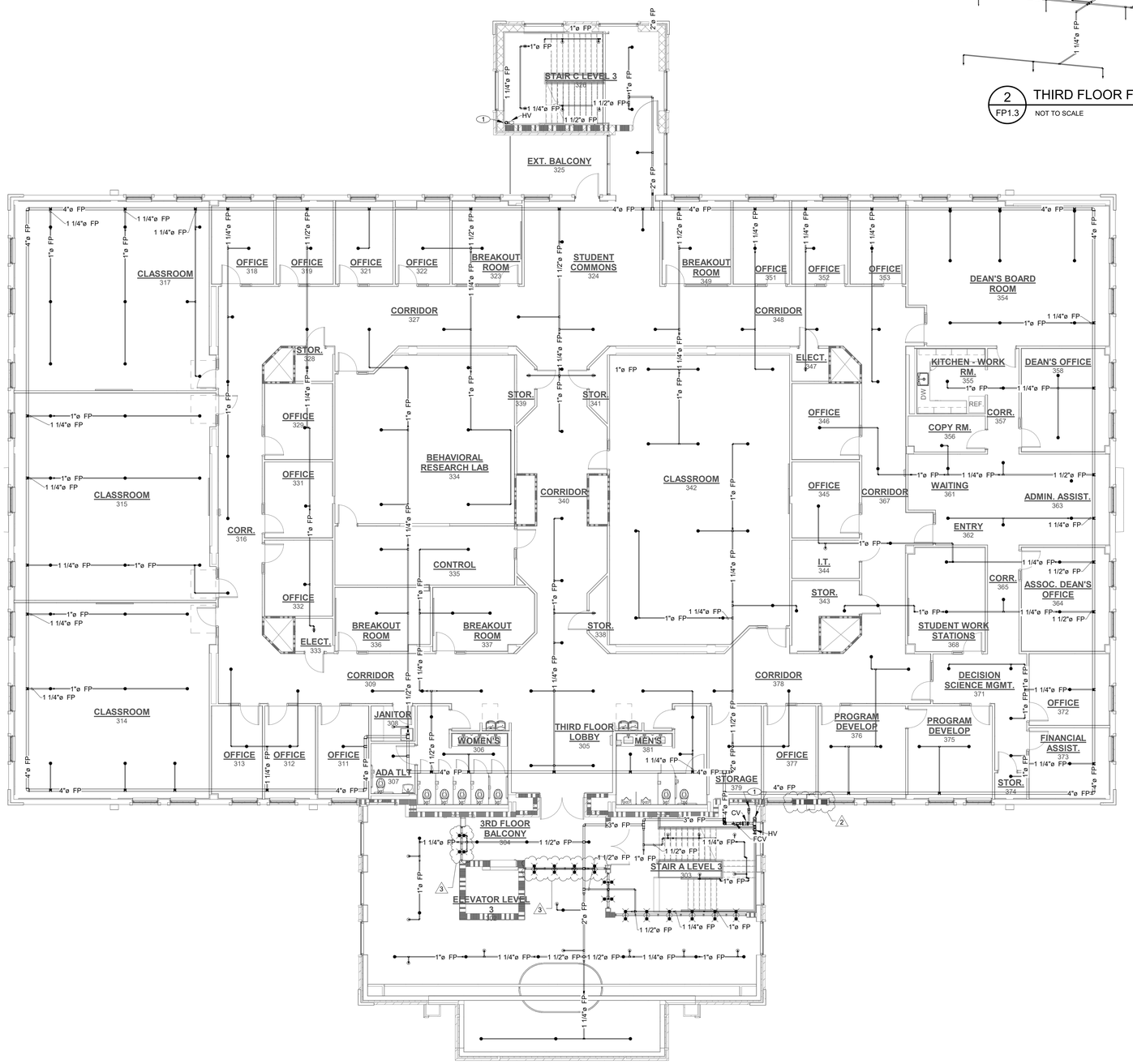

1 FP1.3 THIRD FLOOR FIRE PROTECTION PLAN

SCALE: 1/8" = 1'-0" (WHEN PRINTED FULL SCALE ON 30"x42")

0' 4' 8' 16' 32'

NORTH

FIRE PROTECTION NOTES

GENERAL NOTES

- A COORDINATE ROUTING OF PIPE WITH OTHER TRADES
- B ALL UPRIGHT SPRINKLER HEADS TO BE WITHIN 12" OF ROOF/CEILING DECK
- C COORDINATE SPRINKLER HEADS WITH ARCHITECTURAL RCP
- D PROVIDE SYSTEM DRAINS AS REQUIRED
- E CONCEALED SPACES ABOVE CEILINGS ARE NON-COMBUSTIBLE
- F ALL EXTERIOR OVERHANGS ARE NON-COMBUSTIBLE

NUMBERED NOTES

1 UP TO ABOVE, DOWN TO BELOW

PLUMBING LEGEND:

- FIRE PROTECTION (WET)
- RISER DOWN
- RISER UP
- TYPICAL PENDENT SPRINKLER
- TYPICAL UPRIGHT SPRINKLER
- HORIZONTAL SIDEWALL WINDOW SPRINKLER
- TYPICAL SIDEWALL SPRINKLER

RATED WALL SYMBOL LEGEND

1-HOUR FIRE BARRIER

FLOOR TO UNDERSIDE OF DECK ABOVE AT CONC. BLOCK LOCATIONS (SEE FLOOR PLANS) USE UL DESIGN U905 (NONBEARING) AND UL DESIGN U905 (LOAD BEARING), TERMINATE AT METAL DECK WITH UL SYSTEMS HW-D-0022 (WALL PERPENDICULAR TO DECK) OR HW-D-0030 (WALL PARALLEL TO DECK FLUTES)

AT GYPSUM BOARD WALL LOCATIONS (SEE FLOOR PLANS) USE UL DESIGN U419 WITH; TERMINATE AT METAL DECK WITH UL SYSTEM HW-D-0024 (WALL PERPENDICULAR TO DECK FLUTES) OR HW-D-0029 (WALL PARALLEL TO DECK FLUTES)

2-HOUR FIRE BARRIER

FLOOR TO UNDERSIDE OF DECK ABOVE AT CONC. BLOCK LOCATIONS (SEE FLOOR PLANS) USE UL DESIGN U905 (NONBEARING) AND UL DESIGN U905 (LOAD BEARING), TERMINATE AT METAL DECK WITH UL SYSTEMS HW-D-0022 (WALL PERPENDICULAR TO DECK FLUTES) OR HW-D-0030 (WALL PARALLEL TO DECK FLUTES)

AT GYPSUM BOARD WALL LOCATIONS (SEE FLOOR PLANS) USE UL DESIGN U419 WITH; TERMINATE AT METAL DECK WITH UL SYSTEM HW-D-0024 (WALL PERPENDICULAR TO DECK FLUTES) OR HW-D-0029 (WALL PARALLEL TO DECK FLUTES)

SHAFT WALL - PER IBC 2012-SECTION 713.2
USE UL DESIGN U415, TERMINATE AT METAL DECK WITH UL SYSTEMS HW-D-0549 (FLOOR OR ROOF DECK WITH FLUTES) OR HW-D-0480 (FLOOR OR ROOF DECK WITHOUT FLUTES)

SMOKE PARTITION PER IBC 2012 SECTION 710 AND NFPA 8.3.4.2, WALL SHALL EXTEND TO DECK.

NOTES:
ALL INTERIOR WALLS SHALL EXTEND TO DECK ABOVE UNLESS NOTED OTHERWISE.

PROVIDE 3" HIGH, BRIGHT RED STENCILED LETTERS VISIBLE ABOVE CEILING AT ALL CHANGES IN DIRECTION AND AT 30' INTERVALS ALONG ALL RATED WALLS READING: "____ HOUR FIRE AND SMOKE BARRIER - PROTECT ALL OPENINGS." (INCORPORATE CORRECT WALL DESIGNATIONS) FIRE WALLS SHALL BE STENCILED ON BOTH SIDES OF WALLS.

MAFFETT OFTIS ENGINEERING, LLC
1 S JEFFERSON AVE, STE 101
COOKEVILLE, TN 38501
TEL: (931) 526-5143
www.maffett-oftis.com

COMMUNITY TECTONICS ARCHITECTS
7610 Gleason Road Knoxville, TN 37919
Ph. (865) 637-0890 www.communitytectonics.com

Upland Design Group
P.O. Box 11026 Cookeville, TN 38557
Ph. (931) 484-7541 www.uplanddesigngroup.com

W&O Construction
150 Construction Drive Livingston, TN 38570
Ph. (931) 403-1000 www.wocc.com

PROJECT
JOHNSON HALL RENOVATION & FOSTER DEMOLITION
JOHNSON HALL RENOVATION - PKG. 2
SBC Nº 364/011-04-2022CM

LOCATION
COOKEVILLE, TN

OWNER
TENNESSEE TECH. UNIVERSITY

SEAL
JUSTIN BLAKE NEWELL REGISTERED ENGINEER NO. 118861 STATE OF TENNESSEE 03/28/2025

NO.	DESCRIPTION	DATE
2	ADDENDUM #3	06/11/2025
3	ADDENDUM #5	06/24/2025

JOB NO. 22089

ISSUE DATE 03/28/2025

SHEET TITLE
THIRD FLOOR FIRE PROTECTION PLAN

DRAWN RFS

REVIEW JBN

FP1.3

ELECTRICAL LEGEND

GENERAL

- PANEL
- HOT LEG
- HOT LEG WITH NEUTRAL
- HOT LEG WITH GROUND
- SWITCH LEG
- THREE-WAY CIRCUIT
- CIRCUIT HOME RUN

POWER

- NON-FUSED DISCONNECT
- TRANSFORMER
- 120V DUPLEX RECEPTACLE
- 120V QUAD RECEPTACLE
- 240V RECEPTACLE
- RECEPTACLE WITH GROUND FAULT CIRCUIT INTERRUPTER
- RECEPTACLE, IN-FLOOR BOX & COVER
- WEATHER-RESISTANT RECEPTACLE, IN-USE, METAL, HEAVY-DUTY, WITH GROUND FAULT CIRCUIT INTERRUPTER
- A ABOVE COUNTER RECEPTACLE, COORDINATE WITH ARCHITECTURE
- U UNDER COUNTER RECEPTACLE, COORDINATE WITH ARCHITECTURE
- DATA / TELEPHONE - STUB UP CONDUIT ABOVE WALL
- TELEPHONE - STUB UP CONDUIT ABOVE WALL
- (J) JUNCTION BOX
- NORMALLY CLOSED CONTACT
- NORMALLY OPEN CONTACT
- (R) CONTACT
- (DR) DELAY OFF
- (T) THERMOSTAT
- [T] TIMER
- (F) FUSE

LIGHTING

- $ SWITCH
- 3 4 $ 3 - 4 WAY SWITCH
- D $ DIMMER SWITCH
- OS $ OCCUPANCY SENSOR SWITCH, TIME SETTING OF 30 MIN. UON
- (OS) CEILING-MOUNTED OCCUPANCY SENSOR, TIME SETTING OF 30 MIN. UON - HATCHING ON PLANS INDICATES AIMING OF SENSOR
- (PL) PLUG LOAD CONTROLLER
- (PC) EXTERIOR PHOTO-ELECTRIC CELL SWITCH

WIRING COLOR CODE

CONDUCTOR	COLOR
120/208 (240)	
PHASE A	BLACK
PHASE B	RED
PHASE C (3Φ ONLY)	BLUE
NEUTRAL	WHITE
GROUND	GREEN
277/480	
PHASE A	BROWN
PHASE B	ORANGE
PHASE C (3Φ ONLY)	YELLOW
NEUTRAL	GRAY
GROUND	GREEN

CALL BEFORE YOU DIG

www.call811.com

THE CONTRACTOR SHALL NOTIFY ALL UTILITIES INCLUDING AND NOT LIMITED TO GAS, WATER, ELECTRIC, CABLE, AND TELEPHONE COMPANIES PRIOR TO ANY EXCAVATION. THE CONTRACTOR SHALL NOTIFY ONE-CALL SERVICE (CALL 811) SEVENTY-TWO (72) HOURS AS REQUIRED BY LAW BEFORE ANY EXCAVATION, AT ANY LOCATION.

SURGE PROTECTION DEVICE SCHEDULE

LABEL	MODEL	PART #	AMP RATING
SPD-1	SQUARE-D	TVS2EBA24	240,000

NOTES:
1. USE SPECIFIED DEVICE, SIEMENS, OR INNOVATIVE TECHNOLOGIES
2. INSTALL PER MANUFACTURER'S REQUIREMENTS AND SPD DETAIL

GENERATOR SCHEDULE

LABEL	MANUFACTURER	FUEL TYPE	RATING	VOLTAGE / PHASE	NOTES
G1	CUMMINS	NAT. GAS	250 kW	120/208V 3Φ	1-8

NOTES:
1. SEE SPECIFICATIONS, DETAILS, AND SITE PLAN FOR ADDITIONAL INFORMATION.
2. USE SPECIFIED EQUIPMENT, KOHLER, OR CATERPILLAR.
3. COORDINATE EXACT CONTROL WIRING REQUIREMENTS WITH TRANSFER SWITCH.
4. WEATHER AND SOUND ENCLOSURE
5. BATTERY CHARGER
6. BLOCK HEATER
7. ANNUNCIATOR PANEL
8. TWO YEAR WARRANTY FROM SUBSTANTIAL COMPLETION OF PROJECT
9. GENERATOR SHALL HAVE THE FOLLOWING OUTPUT BREAKERS:
   - (1) 100A 3P BREAKER
   - (1) 200A 3P BREAKER
10. LUG KIT FOR FIRE PUMP CIRCUIT

ELECTRICAL ABBREVIATIONS

A / AB	ABOVE
AF	AMPERE FRAME
AFF	ABOVE FINISHED FLOOR
AFG	ABOVE FINISHED GRADE
AFI	ARC FAULT INTERRUPTER
AHJ	AUTHORITY HAVING JURISDICTION
AIC	AVAILABLE FAULT CURRENT
AMP	AMPERE
AP	ANNUNCIATOR PANEL
AT	AMPERE TRIP
ATS	AUTOMATIC TRANSFER SWITCH
AUTO	AUTOMATIC
BFG	BELOW FINISHED GRADE
BOD	BASIS OF DESIGN
C	CONTACTOR
CKT	CIRCUIT
COM	COMMUNICATION
CT	CURRENT TRANSFORMER
DACR	DIGITAL ALARM COMMUNICATION RECEIVER
DACT	DIGITAL ALARM COMMUNICATION TRANSMITTER
DETD	DUAL ELEMENT TIME DELAY
DN	DOWN
DWG	DRAWING
EC	ELECTRICAL CONTRACTOR
ECB	ENCLOSED CIRCUIT BREAKER
EDP	ELECTRICAL DATUM PLANE
EMG	EMERGENCY
EQUIP	EQUIPMENT
ESP	ELEVATOR SUMP PUMP
ETB	ELECTRONIC TRIP BREAKER
FACP	FIRE ALARM CONTROL PANEL
FAP	FIRE ALARM PANEL
FAS	FIRE ALARM SYSTEM
GAL	GALLON
GAP	GENERATOR ANNUNICATOR PANEL
GD	GARBAGE DISPOSAL
GFCI	GROUND FAULT CIRCUIT INTERRUPTER
GFI	GROUND FAULT INTERRUPTER
GFM	GROUND FAULT MONITOR
GFPE	GROUND FAULT PROTECTION OF EQUIPMENT
GPH	GALLONS PER HOUR
HACR	HEATING, AIR CONDITIONING, REFRIGERATION
HP	HORSEPOWER
HZ	HERTZ
IPC	INTEGRATED POWER CENTER
KVA	KILOVOLT-AMPERE
KW	KILOWATT
LC	LIGHTING CONTACTOR
LEUD	LOCAL ELECTRICAL AND UTILITY DEPARTMENT
MAX	MAXIMUM
MCB	MAIN CIRCUIT BREAKER
MCS	MOLDED CASE SWITCH
MDP	MAIN DISTRIBUTION PANEL
MFG	MANUFACTURING
MFR	MANUFACTURER
MIN	MINIMUM
MLB	MICROLOGIC BREAKER
MLO	MAIN LUG ONLY
MOCP	MAIN OVERCURRENT PROTECTION
N.C.	NORMALLY CLOSED
N.O.	NORMALLY OPEN
OCP	OVERCURRENT PROTECTION
OH	OVERHEAD
PB	PUSH BUTTON
PH / Φ	PHASE
PNL	PANEL
PPC	PORTABLE POWER CABLE
RECIRC	RECIRCULATING / RECIRCULATION
RECPT	RECEPTACLE
SCH	SCHEDULE
SER	SERVICE ENTRANCE CONDUCTOR
SPD	SURGE PROTECTIVE DEVICE
ST	SHUNT TRIP
TEL	TELEPHONE
TMB	THERMAL MAGNETIC BREAKER
TYP	TYPICAL
U / UC	UNDER / UNDER CABINET
UG	UNDERGROUND
UON	UNLESS OTHERWISE NOTED
UPS	UNINTERRUPTIBLE POWER SUPPLY
US	UNDERSLAB
UW	UNDERWATER
V	VOLT
VA	VOLT-AMPERE
W	WATT
WR	WEATHER-RESISTANT
WRI	WEATHER-RESISTANT, IN-USE

ELECTRICAL GENERAL NOTES

1. INSTALLATION SHALL COMPLY WITH ALL APPLICABLE CURRENTLY ADOPTED CODES AT THE TIME OF THE PLAN DATE, INCLUDING (BUT NOT LIMITED TO) THE FOLLOWING:
   - NFPA 70 NATIONAL ELECTRIC CODE (NEC)
   - NFPA 72 NATIONAL FIRE ALARM CODE
   - INTERNATIONAL ENERGY CONSERVATION CODE (IECC)
   - INTERNATIONAL BUILDING CODE (IBC)
   - APPROVED INDEPENDENT TESTING LABORATORY
   - NEMA
2. ELECTRICAL SYSTEM(S) SHALL BE INSTALLED COMPLETE WITH ALL WORK, MATERIALS, AND EQUIPMENT CUSTOMARILY CONSIDERED PART OF SUCH WORK FOR A FULLY OPERATIONAL, COMPLETE, AND CODE COMPLIANT SYSTEM.
3. PLANS ARE DIAGRAMMATIC AND ARE PROVIDED ONLY TO SHOW GENERAL SYSTEM. CONTRACTOR SHALL CONSIDER ACTUAL FIELD CONDITIONS DURING INSTALLATION. ANY GROSS INTERFERENCE SHALL BE BROUGHT TO THE ATTENTION OF THE ENGINEER BEFORE CONTINUING.
4. COMPLETE ELECTRICAL SYSTEMS SHALL BE TESTED FOR COMPLIANCE AND FUNCTION IN ACCORDANCE WITH LOCAL INSPECTIONS AND NATIONAL CODES.
5. PROVIDE COMPLETE AND COMPLIANT EQUIPMENT AND SYSTEM GROUNDING THROUGHOUT ELECTRICAL INSTALLATION. INSTALL BONDING JUMPERS TO OUTLET BOXES IN METALLIC CONDUIT SYSTEMS.
6. ALL 3Φ CIRCUITS SHALL HAVE A-B-C PHASE ROTATION. ALL 3Φ ELECTRICAL SWITCHGEAR, SWITCHBOARDS, MCC'S, AND SIMILAR EQUIPMENT SHALL HAVE A-B-C PHASE ROTATION FROM LEFT TO RIGHT. REFER TO THE POWER WIRING COLOR CODE ON THIS SHEET.
7. WITH ALL LIGHTING AND MOTOR LOADS OPERATING, CONTRACTOR SHALL VERIFY THAT THE PHASE BALANCE IN EACH PANEL IS WITHIN 5%.
8. VERIFY AVAILABLE CIRCUIT CURRENT WITH ELECTRICAL POWER SUPPLIER.
9. VERIFY ALL ELECTRICAL REQUIREMENTS WITH EQUIPMENT MANUFACTURERS. COORDINATE WITH MECHANICAL, PLUMBING, AND GENERAL CONTRACTORS.
10. ALL EXTERIOR EQUIPMENT SHALL BE NEMA 3R RAINTIGHT.
11. FIRE-STOPPING SYSTEM SHALL BE INSTALLED AT ALL PIPING PENETRATIONS THROUGH FIRE-RATED WALLS, CEILINGS, OR CONSTRUCTION.
12. CONTRACTOR SHALL FIELD VERIFY THAT ALL RUNS OF SERVICE ENTRANCE OR FEEDER CONDUCTORS FOR EACH CIRCUIT FOLLOW THE SAME PATH AND ARE OF EQUAL LENGTH.
13. CONDUIT SUBJECT TO THERMAL EXPANSION OF MORE THAN 1/4" OVER A TEMPERATURE RANGE OF 100° F SHALL BE INSTALLED WITH AN EXPANSION FITTING. ALL SUPPORTS SHALL BE LOOSE ENOUGH TO ALLOW THE CONDUIT TO EXPAND AND CONTRACT WITH TEMPERATURE CHANGE. CAREFUL CONSIDERATION SHALL BE MADE TO THE TEMPERATURE AT THE TIME OF INSTALLATION AND THE POSITION OF THE EXPANSION FITTING. FOR EXAMPLE:
    - IF THE TEMPERATURE IS 30° F, THEN THE EXPANSION FITTING SHOULD BE INSTALLED IN THE CLOSED POSITION.
    - IF THE TEMPERATURE IS 85° F, THE N THE EXPANSION FITTING SHOULD BE INSTALLED MORE IN THE OPEN POSITION. FOR PVC CONDUIT, REFER TO NEC ARTICLE 352.44 FOR EXPANSION CHARACTERISTICS.
14. WHERE A20 BRANCH CIRCUIT HOME RUNS ARE LONGER THAN 50', USE A30 WIRE FROM PANEL TO FIRST OUTLET OR FIXTURE.
15. THE DESIGN INTENT OF THE ENGINEER IS FOR EACH CIRCUIT TO BE INSTALLED IN A SINGLE CONDUIT OR RACEWAY. IT SHALL BE PERMITTED TO INSTALL MULTIPLE CIRCUITS CONSISTING OF #10 OR SMALLER IN A SINGLE CONDUIT OR RACEWAY, CONTINGIENT UPON THE CODE COMPLIANCE OF THE INSTALLATION.
16. LOCATE DEVICE BOXES ON OPPOSITE SIDES OF FIRE WALLS A MINIMUM HORIZONTAL DISTANCE OF 24" APART. IF MOUNTED CLOSER, FIRE RATING SHALL BE MAINTAINED.
17. CONTRACTOR SHALL LABEL ALL RECEPTACLES WITH THE PANEL AND CIRCUIT NUMBER POWERING THE DEVICE. USE THE FORMAT " [PANEL NAME] - [CIRCUIT #] ". THE LABEL SHALL BE PLACED ON THE FACEPLATE AS PRACTICAL.
18. COORDINATE FINAL LOCATIONS OF ALL SWITCHES AND OUTLETS WITH OWNER. OWNER SHALL RETAIN RIGHT TO MAKE MINOR LOCATION ADJUSTMENTS PRIOR TO EQUIPMENT INSTALLATION WITHOUT ADDITIONAL COST.
19. LOCATE ALL LIGHT FIXTURES ACCORDING TO REFLECTED CEILING PLAN. COORDINATE MOUNTING REQUIREMENTS WITH CEILING TYPE SPECIFIED BY ARCHITECT. MAINTAIN ALL WALL AND CEILING FIRE RATINGS.
20. ELECTRICAL WORK SHALL INSTALL CIRCUITS TO HVAC CONTROLLERS AND HVAC EQUIPMENT. MECHANICAL WORK SHALL TERMINATE CONDUCTORS WITHIN HVAC EQUIPMENT.
21. THE AMPACITY, VOLTAGE, AND PHASE OF ALL DISCONNECTS SHALL BE RATED PER THE SPECIFIED CIRCUIT AND UPSTREAM OVERCURRENT PROTECTION UON. THE ENCLOSURE NEMA RATING SHALL BE COORDINATED AS REQUIRED BY THE ENVIRONMENT.
22. CONTRACTOR SHALL BE RESPONSIBLE FOR ALL UTILITY FEES AND CHARGES FOR INSTALLATION AND UTILITY UPGRADES FOR PROJECT.
23. CONTRACTOR SHALL COORDINATE AND PAY FOR ALL PERMITS, INSPECTION FEES, UTILITY FEES, AND UTILITY CHARGES FOR THIS PROJECT.
24. IF DISCREPANCIES EXIST WITHIN THE PLANS AND/OR SPECIFICATIONS, THE MOST STRINGENT SHALL APPLY AND IT SHALL BE THE RESPONSIBILITY OF THE CONTRACTOR TO BRING IT TO THE ATTENTION OF THE ENGINEER BEFORE WORK IS STARTED OR MATERIAL/EQUIPMENT IS ORDERED.
25. THE PLANS AND SPECIFICATIONS FOR THIS WORK HAVE BEEN PREPARED WITH THE INTENT TO BE AS ACCURATE AND COMPLETE AS PRACTICAL, BUT ERRORS, OMISSIONS, AND CONFLICTS MAY EXIST. PRIOR TO SUBMITTING A BID FOR CONSTRUCTING THE WORK, THE CONTRACTOR SHALL REVIEW THE PLANS AND SPECIFICATIONS IN DETAIL. ANY QUESTIONS OR COMMENTS SHALL BE BROUGHT TO THE ATTENTION OF THE ENGINEER PRIOR TO SUBMITTING A BID. BY SUBMITTING A BID FOR THE WORK, THE CONTRACTOR ACKNOWLEDGES THAT HE HAS REVIEWED THE PLANS AND SPECIFICATIONS, UNDERSTANDS THE DESIGN INTENT, AND DOES NOT HAVE ANY FURTHER QUESTIONS OR COMMENTS.
26. CONTRACTOR SHALL WARRANTY ALL SYSTEMS FOR PARTS, EQUIPMENT, MATERIAL, AND LABOR FOR A MINIMUM PERIOD OF ONE YEAR FROM THE DATE OF SUBSTANTIAL COMPLETION UNLESS OTHERWISE NOTED IN THE PLANS AND/OR SPECIFICATIONS.
27. THE OWNER AND/OR OWNER'S REPRESENTATIVE SHALL INSPECT THE INSTALLATION AT SUBSTANTIAL COMPLETION AND AT ONE YEAR FROM SUBSTANTIAL COMPLETION. THE CONTRACTOR SHALL BE RESPONSIBLE FOR ALL CORRECTIONS THAT DO NOT CONFORM TO THE CODE AND/OR THE CONTRACT DOCUMENTS.
28. SUBMITTAL REQUIREMENTS: CONTRACTOR SHALL PREPARE AND SUBMIT TO THE ENGINEER FOR REVIEW AND APPROVAL DETAILED PRODUCT INFORMATION ON ALL EQUIPMENT INCORPORATED IN THE PROJECT RELATED TO THE SPECIFIC CONTRACTOR TRADE. SUBMITTAL SHALL BE PROVIDED, AND ENGINEER SHALL REVIEW AND APPROVE, PRIOR TO EQUIPMENT PURCHASE. FOUR COPIES OF SUBMITTALS SHALL BE PROVIDED TO THE ENGINEER. TWO COPIES SHALL BE RETURNED TO THE CONTRACTOR. PRIOR TO SUBMITTAL, CONTRACTOR SHALL REVIEW AND CERTIFY BY SIGNATURE THE SUBMITTED EQUIPMENT MEETS SPECIFICATION. CONTRACTOR SHALL BE RESPONSIBLE FOR ALL DIMENSIONS, FITTINGS, AND CONSTRUCTION FEATURES RELATIVE TO EQUIPMENT. APPROVAL OF SUBMITTAL INFORMATION BY THE ENGINEER ONLY REFERS TO MATERIALS, DESIGN, AND ADHERENCE TO SPECIFICATIONS.

ELECTRICAL MATERIALS SCHEDULE

- ALL NONMETALLIC MATERIAL TO BE UV-RESISTANT
- MC-MX PERMITTED AS FOLLOWS:
  1. WHEN USED FOR 6' WHIPS TO EXTEND BRANCH CIRCUITS TO EQUIPMENT SUCH AS LIGHTING
  2. WHEN USED FOR BRANCH CIRCUITS DESIGNATED WITH AN "A20" FEED. IF THE LENGTH EXCEEDS 50', A30 WIRE SHALL BE USED.

DESCRIPTION	MATERIAL	STANDARDS	REMARKS
SWITCHES			
SAFETY SWITCHES	GENERAL DUTY TYPE #	UL 98	• QUICK MAKE / QUICK BREAK
BOXES			
PULL / JUNCTION / OUTLET BOX	GALVANIZED STEEL	UL 731A	• 1 1/2" MINIMUM DEPTH COORDINATE SIZE WITH NEC COORDINATE COVER MATERIAL & COLOR W/ ARCH/OWNER
RECEPTACLES			
DUPLEX RECEPTACLES	NEMA 5-20R 20-AMP 125-VOLT	UL498	• GROUNDING TYPE • RECEPTACLES WITH LABEL USB SHALL BE STANDARD DUPLEX WITH ADDITIONAL CLASS 2 5VDC TYPE A (2.4 amp) AND TYPE C (3 amp) USB PORTS.
WIRE / CABLE			
#10 & SMALLER	600-VOLT THHN / THWN	UL 83	• SOLID OR STRANDED AS REQUIRED BY THE MANUFACTURER OF THE CONNECTED LOAD • TINNED SOFT • DRAWN COPPER
#8 & LARGER	600-VOLT 3THHN / THWN	UL 83	• STRANDED • TINNED SOFT • DRAWN COPPER
FIXTURE CONDUCTORS	105°C 600-VOLT THHN / THWN	UL 83	• STRANDED • TINNED SOFT • DRAWN COPPER
MC-MX	METAL-CLAD CABLE		• PERMITTED AS NOTED ABOVE
CONDUIT			
RIGID	GALVANIZED STEEL	HH 9359	• USE FOR FEEDERS AND UNDERGROUND, UNDERSLAB, AND ABOVE GROUND SERVICE ENTRANCE
PVC	RIGID POLYVINYL CHLORIDE SCHEDULE 40 & 80	NEMA TC-2	• USE FOR UNDERGROUND AND UNDERSLAB SERVICE ENTRANCE CONDUCTORS, FEEDERS, AND COMMUNICATION ENTRANCE AND TRUNK LINES
EMT	ELEC. METALLIC TUBING GALVANIZED DUCTILE STEEL	HE 8141	• USE ABOVE SLAB FOR FEEDERS, BRANCH CIRCUITS, AND COMMUNICATIONS
CONDUIT HANGERS			
UP TO 3/4"	GALVANIZED STEEL		• 5'-0" O/C MAXIMUM
1" TO 1-1/2"			• 7'-0" O/C MAXIMUM
1-3/4" & UP			• 9'-0" O/C MAXIMUM

POKE-THRU SCHEDULE

EQUIPMENT NOTES:
- USE SPECIFIED EQUIPMENT OR AN APPROVED EQUAL.
- COORDINATE EXACT LOCATIONS WITH ARCHITECTURAL PLANS, FURNITURE, AND OTHER TRADES.
- COORDINATE FLOOR BOX FINISH WITH ARCHITECT.
- CONTRACTOR SHALL PROVIDE AND INSTALL ALL DEVICE PLATES.

LABEL	TYPE	MANUFACTURER	MODEL	ELECTRICAL	TELECOM AND A/V
PT-1	RECESSED	LEGRAND	8AT2PSN	(2) DUPLEX OUTLETS	--

AUTOMATIC TRANSFER SWITCH SCHEDULE

LABEL	MANUFACTURER	VOLTAGE / PHASE	SWITCHED NEUTRAL	AMP RATING	POLES	WCR	MAXIMUM TRANSFER TIME
ATS-O	CUMMINS	208V 3Φ	N	200 A	3	COORDINATE	120 SECONDS
~~ATS-E~~	~~CUMMINS~~	~~208V 3Φ~~	~~N~~	~~100 A~~	~~3~~	~~COORDINATE~~	~~10 SECONDS~~
ATS-FP	FIRETROL	208V 3Φ	N	60 HP	3	COORDINATE	90 SECONDS

NOTES:
1. USE SPECIFIED DEVICE, KOHLER, OR CATERPILLAR.
2. COORDINATE EXACT REQUIREMENTS WITH GENERATOR MANUFACTURER.

SERVICE ENTRANCE CONDUCTOR & CONDUIT LEGEND

ALL WIRE SIZED FOR THWN COPPER
ALL CONDUIT SIZED FOR RIGID PVC, SCHEDULE 40; RESIZE FOR DIFFERENT CONDUIT AS REQUIRED

LABEL	GROUNDING ELECTRODE CONDUCTOR	CONDUCTORS PER CONDUIT	NUMBER OF RUNS	MINIMUM CONDUIT	CONDUCTOR AMPACITY 75 °C	Φ	VOLTAGE RANGE
1S60	#8	(3) #6	1	2"	65	1	208 - 480
1S100	#6	(3) #3	1	3"	100	1	208 - 480
1S150	#6	(3) #1/0	1	3"	150	1	208 - 480
1S200	#4	(3) #3/0	1	3"	200	1	208 - 480
1S225	#2	(3) #4/0	1	3"	230	1	208 - 480
1S400	#1/0	(3) #3/0	2	3"	400	1	208 - 480
1S400	#1/0	(3) #600 KCM	1	4"	420	1	208 - 480
1S600	#3/0	(3) #3/0	3	3"	600	1	208 - 480
1S600	#3/0	(3) #350 KCM	2	3"	620	1	208 - 480
1S800	#3/0	(3) #3/0	4	3"	800	1	208 - 480
1S800	#3/0	(3) #300 KCM	3	3"	855	1	208 - 480
1S1000	#3/0	(3) #250 KCM	4	3"	1020	1	208 - 480
3S100	#8	(4) #3	1	3"	100	3	208 - 480
3S200	#4	(4) #3/0	1	3"	200	3	208 - 480
3S225	#2	(4) #4/0	1	3"	230	3	208 - 480
3S400	#1/0	(4) #3/0	2	3"	400	3	208 - 480
3S600	#3/0	(4) #350 KCM	2	3"	620	3	208 - 480
3S800	#3/0	(4) #300 KCM	3	3"	855	3	208 - 480
3S1000	#3/0	(4) #400 KCM	3	3"	1005	3	208 - 480
3S1000	#3/0	(4) #250 KCM	4	3"	1020	3	208 - 480
3S1200	#3/0	(4) #350 KCM	4	3"	1240	3	208 - 480
3S1400	#3/0	(4) #500 KCM	4	4"	1520	3	208 - 480
3S1600	#3/0	(4) #400 KCM	5	3"	1675	3	208 - 480
3S2000	#3/0	(4) #600 KCM	5	4"	2100	3	208 - 480
3S2500	#3/0	(4) #600 KCM	6	4"	2520	3	208 - 480
3S3000	#3/0	(4) #500 KCM	8	4"	3040	3	208 - 480
3S3500	#3/0	(4) #700 KCM	8	4"	3680	3	208 - 480
3S3500	#3/0	(4) #600 KCM	9	4"	3780	3	208 - 480
3S4000	#3/0	(4) #600 KCM	10	4"	4200	3	208 - 480

BRANCH CIRCUIT AND FEEDER LEGEND W/ EQUIP. GND.

ALL WIRE SIZED FOR THWN COPPER
ALL CONDUIT SIZED FOR RIGID PVC, SCHEDULE 40; RESIZE FOR DIFFERENT CONDUIT AS REQUIRED
FEEDER LABEL WITH * IN THE PLANS INDICATES NEUTRAL IS NOT REQUIRED

LABEL	CONDUCTORS PER CONDUIT	NUMBER OF RUNS	MINIMUM CONDUIT	CONDUCTOR AMPACITY 75 °C	Φ	VOLTAGE RANGE
A20	(2) #12 & (1) #12 GND.	1	1/2"	20	1	120 OR 277
A30	(2) #10 & (1) #10 GND.	1	3/4"	30	1	120 OR 277
A50	(2) #8 & (1) #10 GND.	1	3/4"	50	1	120 OR 277
B20	(3) #12 & (1) #12 GND.	1	1/2"	20	1	208 - 480
B30	(3) #10 & (1) #10 GND.	1	3/4"	30	1	208 - 480
B50	(3) #8 & (1) #10 GND.	1	3/4"	50	1	208 - 480
B60	(3) #6 & (1) #10 GND.	1	3/4"	65	1	208 - 480
B80	(3) #4 & (1) #8 GND.	1	1"	85	1	208 - 480
B100	(3) #3 & (1) #8 GND.	1	1-1/2"	100	1	208 - 480
B110	(3) #2 & (1) #6 GND.	1	1-1/2"	115	1	208 - 480
B125	(3) #1 & (1) #6 GND.	1	1-1/2"	130	1	208 - 480
B150	(3) #1/0 & (1) #6 GND.	1	2"	150	1	208 - 480
B175	(3) #2/0 & (1) #6 GND.	1	2"	175	1	208 - 480
B200	(3) #3/0 & (1) #6 GND.	1	2"	200	1	208 - 480
B225	(3) #4/0 & (1) #4 GND.	1	2-1/2"	230	1	208 - 480
B250	(3) #250 KCM & (1) #4 GND.	1	2-1/2"	255	1	208 - 480
B275	(3) #300 KCM & (1) #4 GND.	1	2-1/2"	285	1	208 - 480
B300	(3) #350 KCM & (1) #4 GND.	1	3"	310	1	208 - 480
B350	(3) #500 KCM & (1) #3 GND.	1	3"	380	1	208 - 480
B400	(3) #3/0 & (1) #3 GND.	2	2"	400	1	208 - 480
B450	(3) #4/0 & (1) #2 GND.	2	2-1/2"	460	1	208 - 480
B500	(3) #250 KCM & (1) #2 GND.	2	2-1/2"	510	1	208 - 480
B600	(3) #350 KCM & (1) #1 GND.	2	3"	620	1	208 - 480
B800	(3) #300 KCM & (1) #1/0 GND.	3	2-1/2"	855	1	208 - 480
B1000	(3) #250 KCM & (1) #2/0 GND.	4	2-1/2"	1020	1	208 - 480
B1200	(3) #350 KCM & (1) #3/0 GND.	4	3"	1240	1	208 - 480
C20	(4) #12 & (1) #12 GND.	1	1/2"	20	3	208 - 480
C30	(4) #10 & (1) #10 GND.	1	3/4"	30	3	208 - 480
C50	(4) #8 & (1) #10 GND.	1	3/4"	50	3	208 - 480
C60	(4) #6 & (1) #10 GND.	1	1"	65	3	208 - 480
C80	(4) #4 & (1) #8 GND.	1	1-1/2"	85	3	208 - 480
C100	(4) #3 & (1) #8 GND.	1	1-1/2"	100	3	208 - 480
C110	(4) #2 & (1) #6 GND.	1	1-1/2"	115	3	208 - 480
C125	(4) #1 & (1) #6 GND.	1	1-1/2"	130	3	208 - 480
C150	(4) #1/0 & (1) #6 GND.	1	2"	150	3	208 - 480
C175	(4) #2/0 & (1) #6 GND.	1	2"	175	3	208 - 480
C200	(4) #3/0 & (1) #6 GND.	1	2"	200	3	208 - 480
C225	(4) #4/0 & (1) #4 GND.	1	3"	230	3	208 - 480
C250	(4) #250 KCM & (1) #4 GND.	1	3"	255	3	208 - 480
C300	(4) #350 KCM & (1) #4 GND.	1	3"	310	3	208 - 480
C350	(4) #500 KCM & (1) #3 GND.	1	3-1/2"	380	3	208 - 480
C400	(4) #3/0 & (1) #3 GND.	2	2"	400	3	208 - 480
C450	(4) #4/0 & (1) #2 GND.	2	3"	460	3	208 - 480
C500	(4) #250 KCM & (1) #2 GND.	2	3"	510	3	208 - 480
C600	(4) #350 KCM & (1) #1 GND.	2	3"	620	3	208 - 480
C800	(4) #300 KCM & (1) #1/0 GND.	3	3"	855	3	208 - 480
C1000	(4) #250 KCM & (1) #2/0 GND.	4	3"	1020	3	208 - 480
C1200	(4) #350 KCM & (1) #3/0 GND.	4	3"	1240	3	208 - 480
C1400	(4) #500 KCM & (1) #4/0 GND.	4	3-1/2"	1520	3	208 - 480
C1600	(4) #400 KCM & (1) #4/0 GND.	5	3"	1675	3	208 - 480
C2000	(4) #600 KCM & (1) #250 KCM GND.	5	4"	2100	3	208 - 480

3

CARY DALE LOFTIS REGISTERED ENGINEER 06/24/2025 STATE OF TENNESSEE

MAFFETT LOFTIS ENGINEERING, LLC
1 S JEFFERSON AVE, STE 101
COOKEVILLE, TN 38501
TEL: (931) 526-5143
www.maffett-loftis.com

COMMUNITY TECTONICS ARCHITECTS
7610 Gleason Road Knoxville, TN 37919
Ph. (865) 637-0890 www.communitytectonics.com

Upland Design Group
P.O. Box 1328 Crossville, TN 38557
Ph. (931) 484-7541 www.uplanddesigngroup.com

W&O Construction
150 Construction Drive Livingston, TN 38570
Ph. (931) 431-1000 www.wocc.com

PROJECT
JOHNSON HALL RENOVATION & FOSTER DEMOLITION
JOHNSON HALL RENOVATION - PKG. 2
SBC Nº 364/011-04-2022CM

LOCATION
COOKEVILLE, TN

OWNER
TENNESSEE TECH. UNIVERSITY

SEAL
CARY DALE LOFTIS REGISTERED ENGINEER 03/28/2025 STATE OF TENNESSEE

NO.	DESCRIPTION	DATE
3	ADDENDUM #5	06/24/2025

JOB NO. 22089

ISSUE DATE 03/28/2025

SHEET TITLE
ELECTRICAL NOTES AND LEGENDS

DRAWN JLC

REVIEW AJG

E0.1

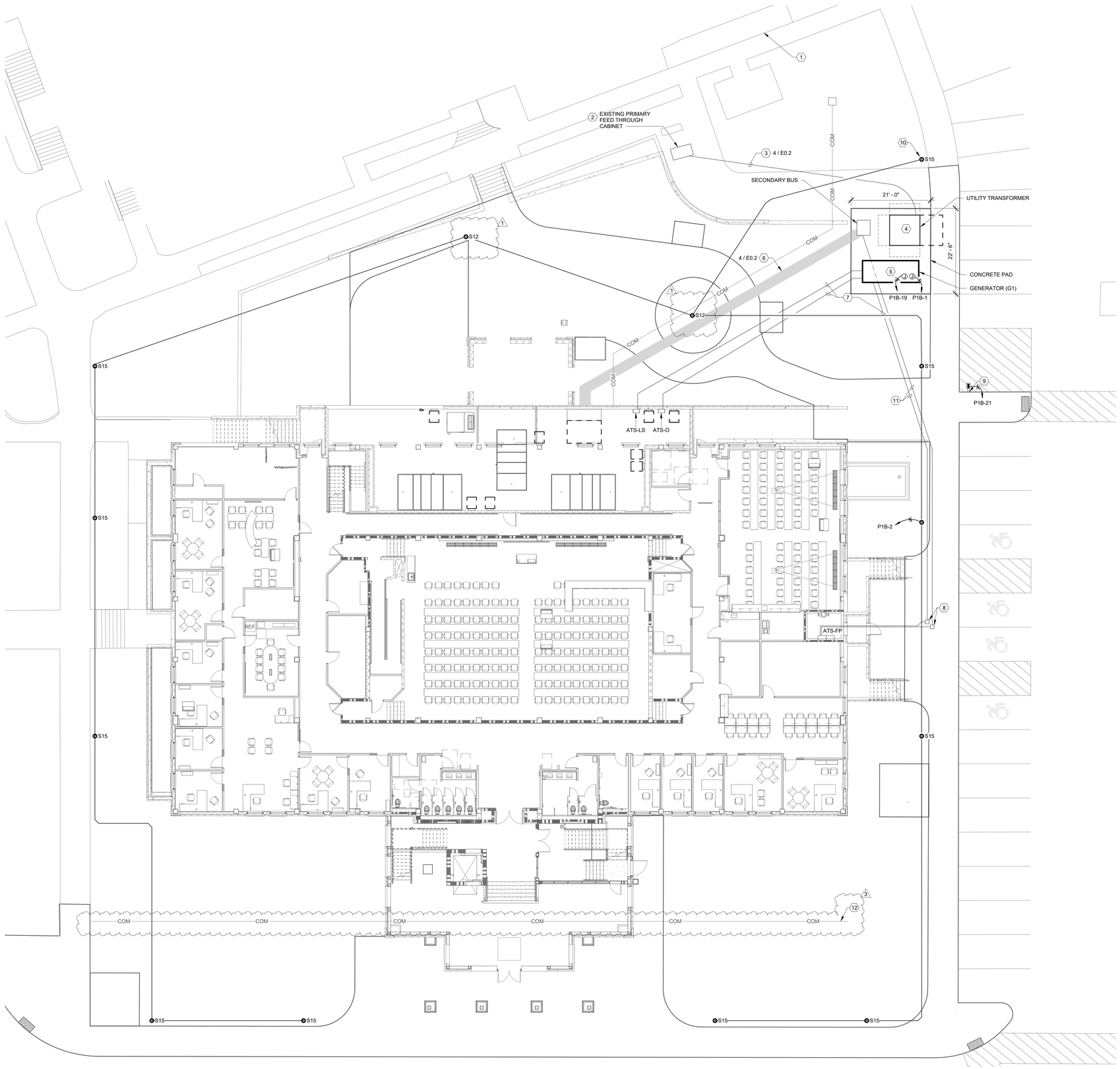

ELECTRICAL NOTES

NUMBERED NOTES

1. EXISTING TRANSENCLOSURE LOCATION TO REMAIN.
2. EXISTING FEED THROUGH CABINET TO REMAIN.
3. INSTALL (3) 4" CONDUITS BELOW GRADE FROM FEED THROUGH CABINET. SEE REFERENCED DITCH DETAIL FOR ADDITIONAL INFORMATION. COORDINATE WITH EXISTING CONDITIONS AND SITE.
4. NEW UTILITY TRANSFORMER. COORDINATE WITH COOKEVILLE ELECTRIC.
5. SEE GENERATOR SCHEDULE FOR ADDITIONAL INFORMATION.
6. UNDERGROUND SERVICE CONDUCTORS ROUTED TO MAIN SWITCHBOARD 'MSB'. SEE REFERENCED DITCH DETAIL FOR ADDITIONAL INFORMATION.
7. UNDERGROUND FEEDERS ROUTED FROM GENERATOR TO TRANSFER SWITCHES AS NOTED. SEE REFERENCED DITCH DETAIL. COORDINATE WITH EXISTING CONDITIONS AND SITE.
8. IN-GRADE QUAZITE PULL BOXES. CONTRACTOR SHALL SIZE BOXES PER NEC. COORDINATE WITH SITE AND DEPTH OF CONDUITS.
9. ELECTRIC GOLF CART CHARGING PEDESTAL. COORDINATE MOUNTING AND INSTALLATION REQUIREMENTS WITH MANUFACTURER AND OWNER.
10. CONTRACTOR TO INSTALL WIRELESS CONTROL MODULE IN ALL "S" FIXTURES. MODULE SUPPLIED BY OWNER.
11. UN-FUSED CONDUCTORS FROM THE UTILITY TRANSFORMER AND GENERATOR TO THE FIRE PUMP CONTROLLER. ALSO, E-STOP CONTROL CIRCUIT.
12. EXISTING UNDERGROUND COMMUNICATION CONDUIT TO BE REMOVED. COORDINATE EXACT LOCATION WITH CIVIL.

1 E1.0 ELECTRICAL SITE PLAN

SCALE: 3/32" = 1'-0" (WHEN PRINTED FULL SCALE ON 30"x42")

0' 5' 10' 20' 40'

MAFFETT OFTIS ENGINEERING, LLC
1 S JEFFERSON AVE, STE 101
COOKEVILLE, TN 38501
TEL: (931) 526-5143
www.maffett-oftis.com

COMMUNITY TECTONICS ARCHITECTS
7610 Gleason Road Knoxville, TN 37919
Ph. (865) 637-0890 www.communitytectonics.com

Upland Design Group
P.O. Box 1328 Crossville, TN 38557
Ph. (931) 484-7541 www.uplanddesigngroup.com

W&O Construction
150 Construction Drive Livingston, TN 38570
Ph. (931) 403-1000 www.wocc.com

PROJECT
JOHNSON HALL RENOVATION & FOSTER DEMOLITION
JOHNSON HALL RENOVATION - PKG. 2
SBC Nº 364/011-04-2022CM

OWNER: TENNESSEE TECH. UNIVERSITY
LOCATION: COOKEVILLE, TN

SEAL

NO.	DESCRIPTION	DATE
1	ADDENDUM #1	2025/23/05
3	ADDENDUM #5	06/24/2025

JOB NO. 22089

ISSUE DATE 03/28/2025

SHEET TITLE ELECTRICAL SITE PLAN

DRAWN JLC

REVIEW AJG

E1.0

ELECTRICAL NOTES

NUMBERED NOTES

1. COORDINATE EXACT REQUIREMENTS WITH COOKEVILLE ELECTRIC DEPARTMENT.
2. BREAKERS INTEGRAL TO GENERATOR. SEE GENERATOR SCHEDULE AND SPECIFICATIONS FOR ADDITIONAL INFORMATION.
3. FEEDER TO FIRE PUMP SHALL NOT HAVE OVERCURRENT PROTECTION AT THE GENERATOR.
4. COORDINATE EXACT REQUIREMENTS WITH FIRE PROTECTION.

GENERAL NOTES

A. COORDINATE ROUTING OF ALL UNDERGROUND FEEDERS WITH SITE AND EXISTING CONDITIONS.

B. REFER TO PANEL SCHEDULES, FLOOR PLANS, AND SITE PLAN FOR ADDITIONAL INFORMATION.

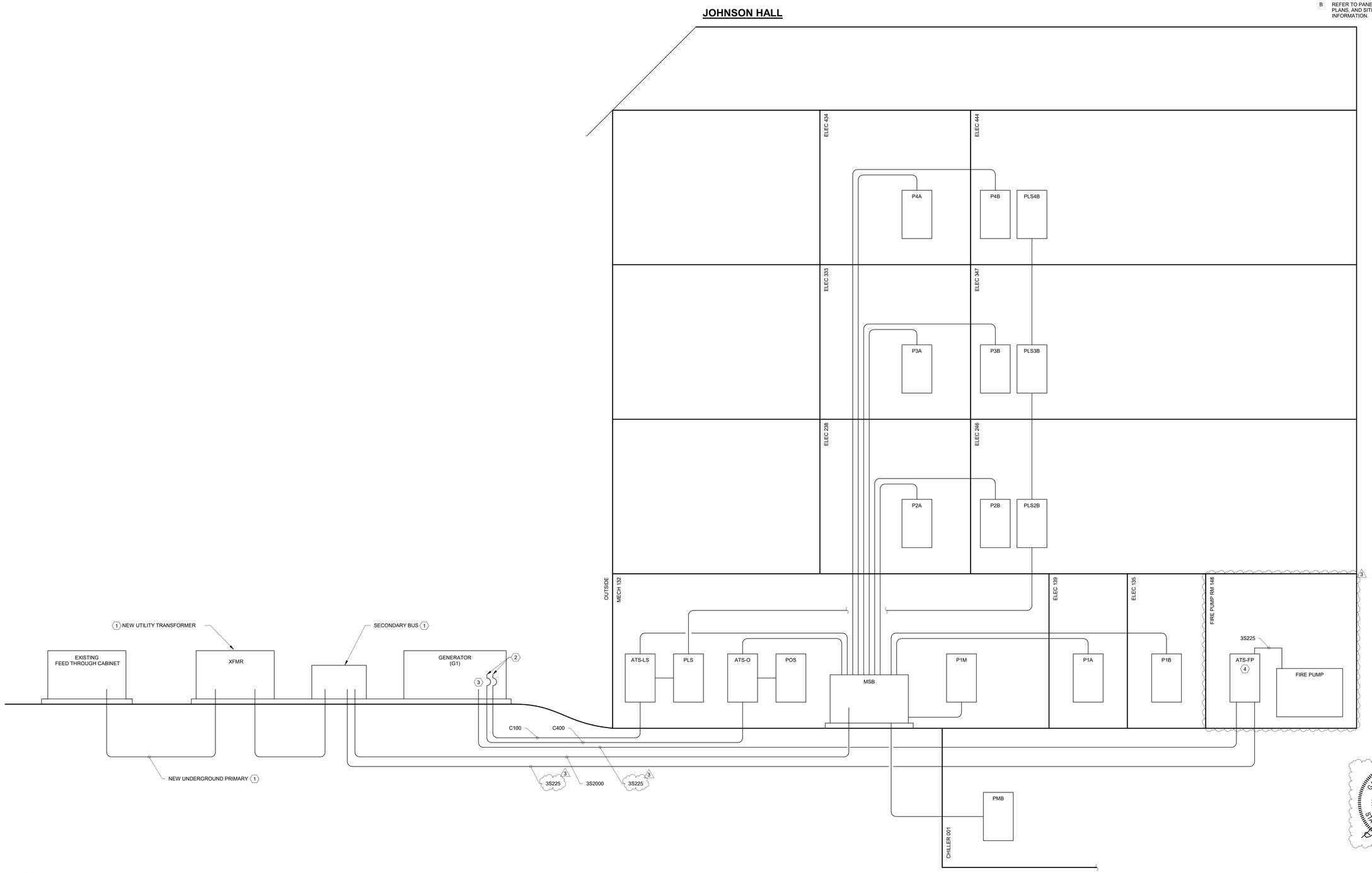

1 / E4.1 ELECTRICAL RISER DIAGRAM

NOT TO SCALE

MAFFETT LOFTIS ENGINEERING, LLC
1 S.JEFFERSON AVE. STE 101
COOKEVILLE, TN 38501
TEL: (931) 526-5143
www.maffett-loftis.com

COMMUNITY TECTONICS ARCHITECTS
7610 Gleason Road, Knoxville, TN 37919
Ph. (865) 637-0890, www.communitytectonics.com

Upland Design Group
P.O. Box 11026, Cookeville, TN 38557
Ph. (931) 484-7541, www.uplanddesigngroup.com

W&Q Construction
150 Construction Drive, Livingston, TN 38570
Ph. (931) 403-1000, www.wqcc.com

PROJECT
JOHNSON HALL RENOVATION & FOSTER DEMOLITION
JOHNSON HALL RENOVATION - PKG. 2
SBC Nº 364/011-04-2022CM

OWNER: TENNESSEE TECH. UNIVERSITY

LOCATION: COOKEVILLE, TN

SEAL: GARY DALE LOFTIS, REGISTERED ENGINEER, MIDDLE ELECTRIC, UNITED STATES OF AMERICA, STATE OF TENNESSEE — 03/28/2025

NO.	DESCRIPTION	DATE
3	ADDENDUM #5	06/24/2025

JOB NO. 22089

ISSUE DATE 03/28/2025

SHEET TITLE: ELECTRICAL RISER DIAGRAM

DRAWN: JLC

REVIEW: AJG

E4.1

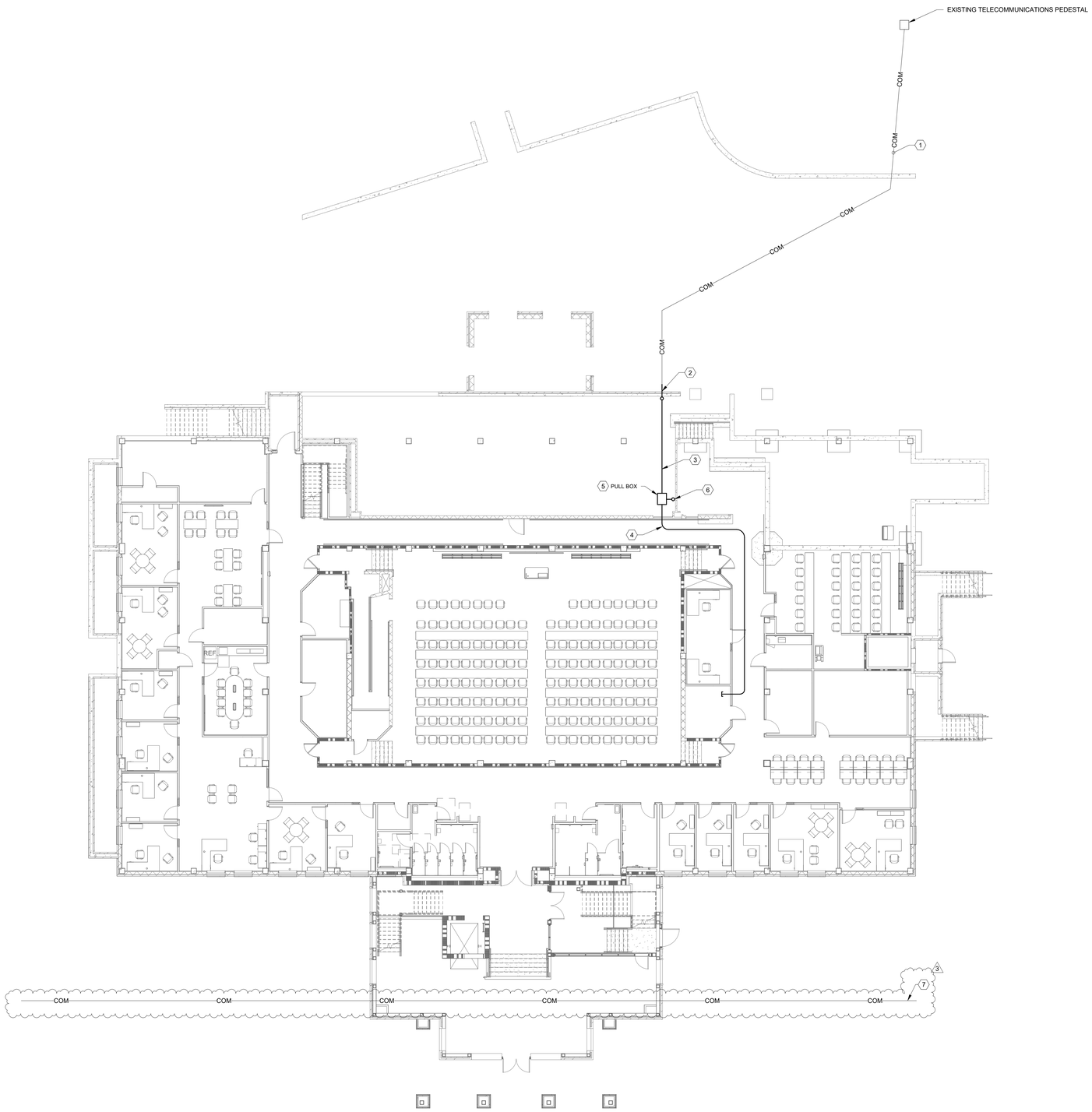

TECHNOLOGY NOTES

NUMBERED NOTES

1. (1) 4" CONDUIT FOR TELECOMMUNICATIONS CABLING ROUTED INTO THE BUILDING. CONDUIT SHALL BE BURIED 24" BELOW FINISHED GRADE. COORDINATE WITH ELECTRICAL CONTRACTOR.
2. INSTALL NEW PENETRATION SLEEVE FOR COMMUNICATIONS CONDUIT. COORDINATE EXACT LOCATION WITH EXISTING PENETRATION. CONTRACTOR SHALL SEAL PENETRATIONS AS REQUIRED.
3. CONDUIT SHALL BE ROUTED EXPOSED TO CORRIDOR AS PRACTICAL. COORDINATE WITH OTHER TRADES AND STRUCTURE.
4. CONDUIT SHALL BE ROUTED CONCEALED ABOVE ACCESSIBLE CEILINGS TO MDF ROOM AS INDICATED. COORDINATE WITH OTHER TRADES.
5. INSTALL (1) 36" X 36" X 36" PULL BOX FOR TELECOMMUNICATIONS CABLING. COORDINATE EXACT LOCATION AND MOUNTING WITH STRUCTURE AND MECHANICAL EQUIPMENT.
6. ROUTE (1) 3" CONDUIT TO EXISTING CATV HEAD-END EQUIPMENT. STUB DOWN DONDUIT 72" AFF WITH SCUFF-GUARD.
7. EXISTING UNDERGROUND COMMUNICATION CONDUIT TO BE REMOVED. COORDINATE EXACT LOCATION WITH CIVIL. (3)

GENERAL NOTES

A. REFER TO TELECOMMUNICATIONS RISER DIAGRAM FOR ADDITIONAL INFORMATION.

1 / T1.0 TELECOMMUNICATIONS SITE PLAN

SCALE: 3/32" = 1'-0" (WHEN PRINTED FULL SCALE ON 30"x42")

0' 5' 10' 20' 40'

COMMUNITY TECTONICS ARCHITECTS
7610 Gleason Road, Knoxville, TN 37919
Ph. (865) 637-0890, www.communitytectonics.com

Upland Design Group
P.O. Box 11026, Cookeville, TN 38557
Ph. (931) 484-7541, www.uplanddesigngroup.com

W&O Construction
150 Construction Drive, Livingston, TN 38570
Ph. (931) 403-1000, www.wocc.com

PROJECT
JOHNSON HALL RENOVATION & FOSTER DEMOLITION
JOHNSON HALL RENOVATION - PKG. 2
SBC Nº 364/011-04-2022CM

OWNER: TENNESSEE TECH. UNIVERSITY
LOCATION: COOKEVILLE, TN

SEAL
CARY DALE LOFTIS
REGISTERED ENGINEER
03/28/2025
STATE OF TENNESSEE

NO.	DESCRIPTION	DATE
3	ADDENDUM #5	06/24/2025

CARY DALE LOFTIS
REGISTERED ENGINEER
06/24/2025
STATE OF TENNESSEE

MAFFETT LOFTIS ENGINEERING, LLC
1 S JEFFERSON AVE, STE 101
COOKEVILLE, TN 38501
TEL: (931) 528-5143
www.maffett-loftis.com

JOB NO. 22089

ISSUE DATE 03/28/2025

SHEET TITLE TECHNOLOGY SITE PLAN

DRAWN JLC

REVIEW AJG

T1.0